100C09EJ10

Allen-Bradley 100C Contactor 4kW 3Pole 24VDC Coil 1NO Contact Auxiliary

CONTACTORS



Component type	Power contactor, AC switching
Range	100C
Model	N/A
Product status	Existing

The Allen-Bradley 100-C contactor line offers compact, high-performance design in 9 to 97 A contactors. These energy efficient contactors are designed to control motors and other loads. Straightforward wiring and installation process ensure quick and easy setup, reducing downtime and increasing productivity.

ELECTRICAL	Number of normally open contacts as main contact	3
	Number of normally closed contacts as main contact	0
	Rated operation current Ie at AC-3, 400 V	9 A
	Rated operation power at AC-3, 400 V	4 kW
	Rated operation current Ie at AC-1, 400 V	32 A
	Max. rated operation voltage Ue AC	690 V
	Voltage type for actuating	DC
	Control supply voltage Us at DC	24 V
	Number of auxiliary contacts as normally open contact	1
	Number of auxiliary contacts as normally closed contact	0
	Rated operation current Ie at AC-3, 690 V	5 A
	Rated operation power at AC-3, 690 V	4 kW
	Rated operation power at AC-4, 400 V	1.8 kW
	Power consumption, DC coil pickup	10 W
	Power consumption, DC coil hold-in	1.7 W
	Type of electrical connection of main circuit	Screw connection
	Rated operation current Ie at AC-4, 400 V	4.3 A
CONSTRUCTION	IP rating	IP20
	Mounting method	DIN-rail/screw
DIMENSIONS	Height	81 mm
	Width	45 mm
	Depth	86.5 mm
	Weight	0.4 kg

Published on 05 November 2026

100C09EJ10

Allen-Bradley 100C Contactor 4kW 3Pole 24VDC Coil 1NO Contact Auxiliary

CONTACTORS

DIMENSIONAL DIAGRAM

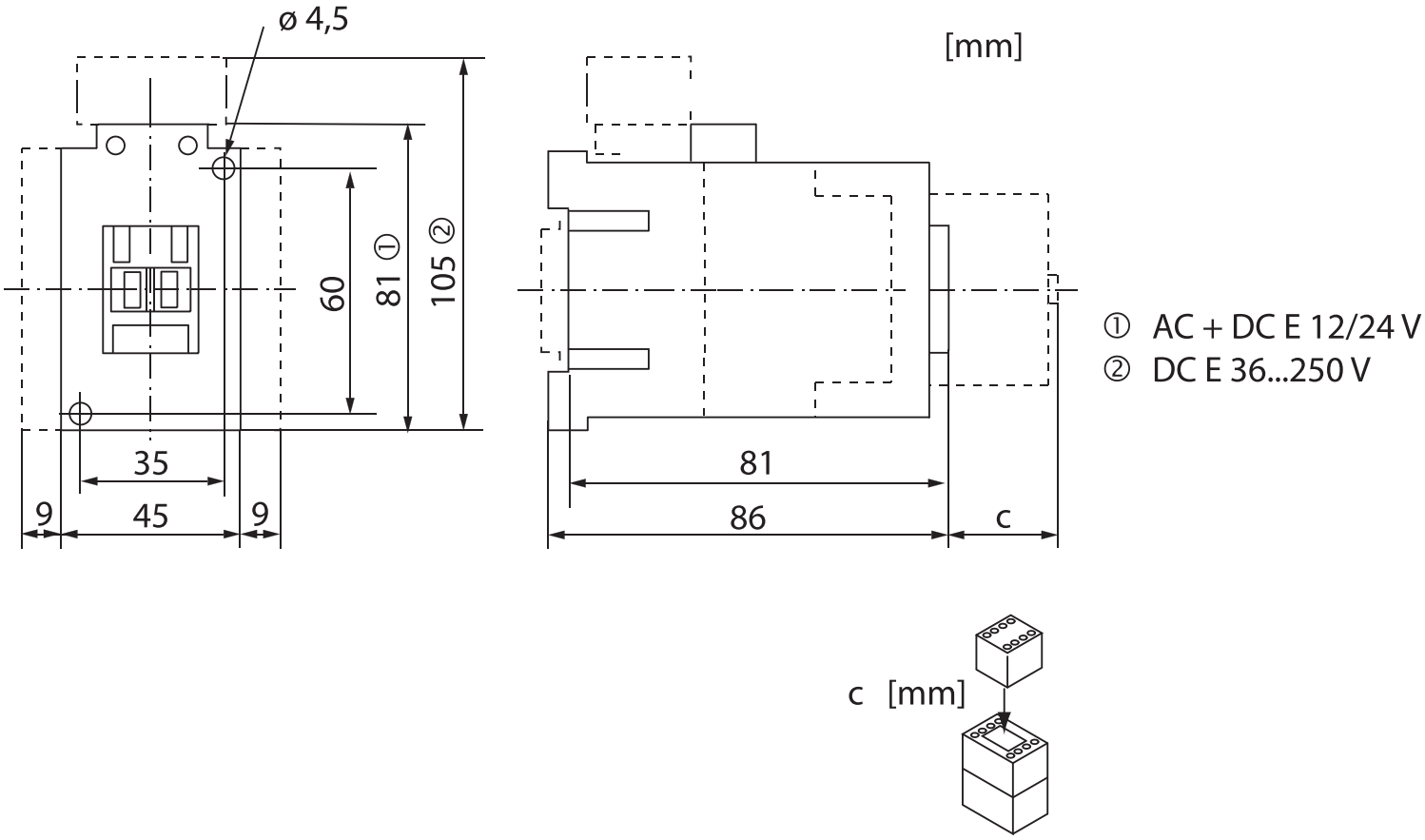

RELATED PRODUCTS

ACCESSORY



Item No: 140MCPEC23

Required: No

Description: Allen-Bradley 140M Connecting Link 140MC to 100C 09 to 23

Published on 05 November 2026