VLB3153P

Socomec VLB Visual Load Break Switch Kit, w/ External Handle, 3P 315A

LOAD BREAK SWITCHES

Component type	Switch disconnector
Range	VLB
Model	N/A
Product status	Existing

The Socomec VLB series of load break switches features visible and positive break indication ensuring safe switching. The user can visually assess the condition of the device and confirm isolation during maintenance or prior to operation. Available from 32 to 800A, suitable for safety focus applications and emergency load break with front or side operation based on your installation preference.

ELECTRICAL	Rated permanent current at AC-21, 400 V	315 A
	Rated uninterrupted current Iu	315 A
	Number of poles	3
	Rated operation power at AC-23, 400 V	160 kW
	Rated operation current Ie at AC-23a, 400 V	315 A
	Rated operation current Ie at AC-23a, 500 V	250 A
	Rated operation current Ie at AC-23a, 690 V	250 A
	Rated short-time withstand current Icw	17 kA
	Rated insulation voltage Ui	800 V
	Rated impulse withstand voltage Uimp	8 kV
	Type of control element	Long turning handle
	Rated permanent current at AC-23, 400 V	315 A
	Number of auxiliary contacts as normally closed contact	0
	Number of auxiliary contacts as normally open contact	0
	Number of auxiliary contacts as change-over contact	0
CONSTRUCTION	Degree of protection (IP), front side	IP65
	Version as main switch	Yes
	Version as reversing switch	No
	Number of switches	1
	Suitable for front mounting 4-hole	No
	Suitable for front mounting centre	No
	Suitable for distribution board installation	Yes
	Suitable for intermediate mounting	No
	Interlockable	Yes

VLB3153P

Socomec VLB Visual Load Break Switch Kit, w/ External Handle, 3P 315A

LOAD BREAK SWITCHES

MECHANICAL	Padlock locking	Yes
DIMENSIONS	Height	195 mm
	Width	234 mm
	Depth	132 mm
	Weight	3.2 kg

DIMENSIONAL DIAGRAM

SIDER VLB 250 to 500 A

External front operation

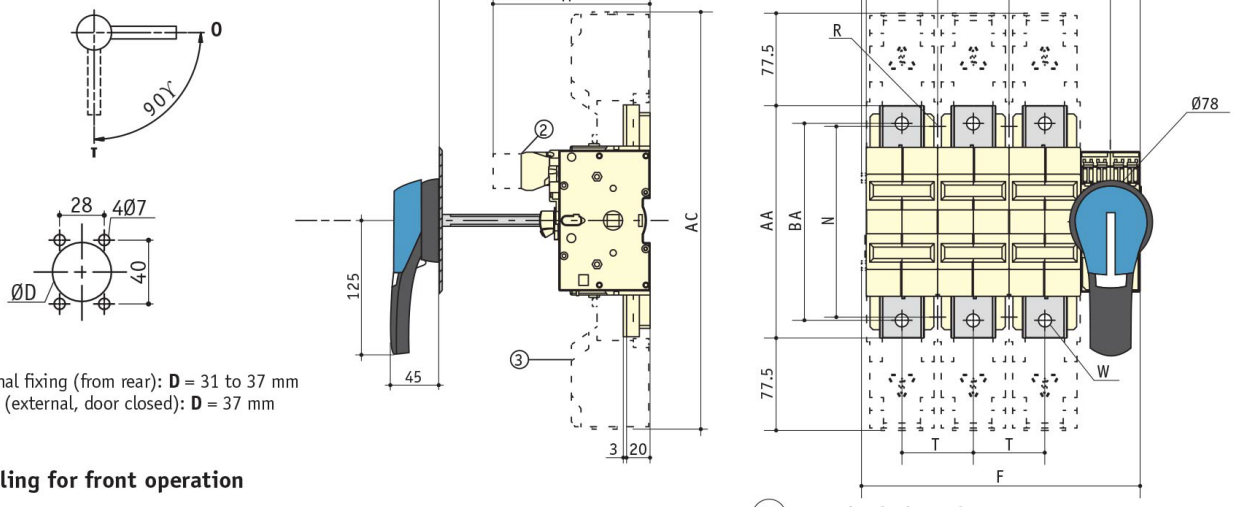

Conventional fixing (from rear): **D** = 31 to 37 mm
Fast fixing (external, door closed): **D** = 37 mm

(1) **Door drilling for front operation**

(2) **1 or 2 pre-break and signalling ACs**

(3) **Terminal shrouds**

Rating (A)	Terminal shrouds AC	Switch body F 3p.	F 4p.	H	J	Switch mounting N	R	T	Connection terminals W	AA	BA
250	350	234	294	132	85	162	6	60	10	195	165
315	350	234	294	132	85	162	6	60	10	195	165
400	360	252	318	132	91	172	6	66	10	214	175
500	360	252	318	132	91	172	6	66	10	214	175

Published on 24 July 2026