V5AR41816

PROCONECT 3PV5 Appliance Inlet, 3P+N+E+2p, 500A, suits 185mm2 cable, w/ Crimp Terminals

HIGH CURRENT PLUGS

PROCONECT®

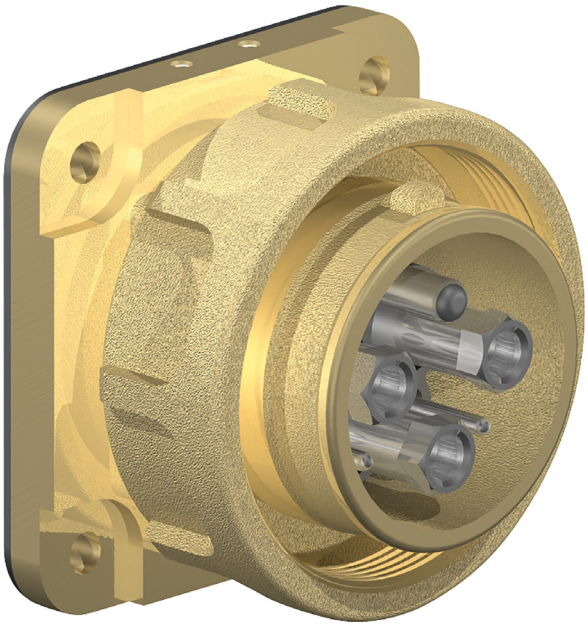

Component type	Round socket/plug for high currents
Range	3PX/3PV
Model	N/A
Product status	Existing

The Proconect 3PX and 3PV range of high-current plugs and sockets suit a variety of industries including mining, marine, transportation, and commercial. Available in either a screw ring (3PV) or push-pull connection (3PX) type. Current ratings of 160A to 660A (at 3.3 kV) and corrosion-proof aluminium construction make it ideal for the harsh Australian environment.

ELECTRICAL	Amperage	500 A
	Voltage	1-3300 V
	Contact configuration	3P+N+E+2P
CONSTRUCTION	Construction type	Inlet
	Material insulation body	Other
	IP rating	IP67
DIMENSIONS	Width	158 mm
	Length	158 mm
	Height	109 mm
	Weight	3 kg
ENVIRONMENT	Operating temperature	-30…60 °C

Published on 04 September 2026

V5AR41816

PROCONECT 3PV5 Appliance Inlet, 3P+N+E+2p, 500A, suits 185mm2 cable, w/ Crimp Terminals

HIGH CURRENT PLUGS

PROCONECT®

DIMENSIONAL DIAGRAM

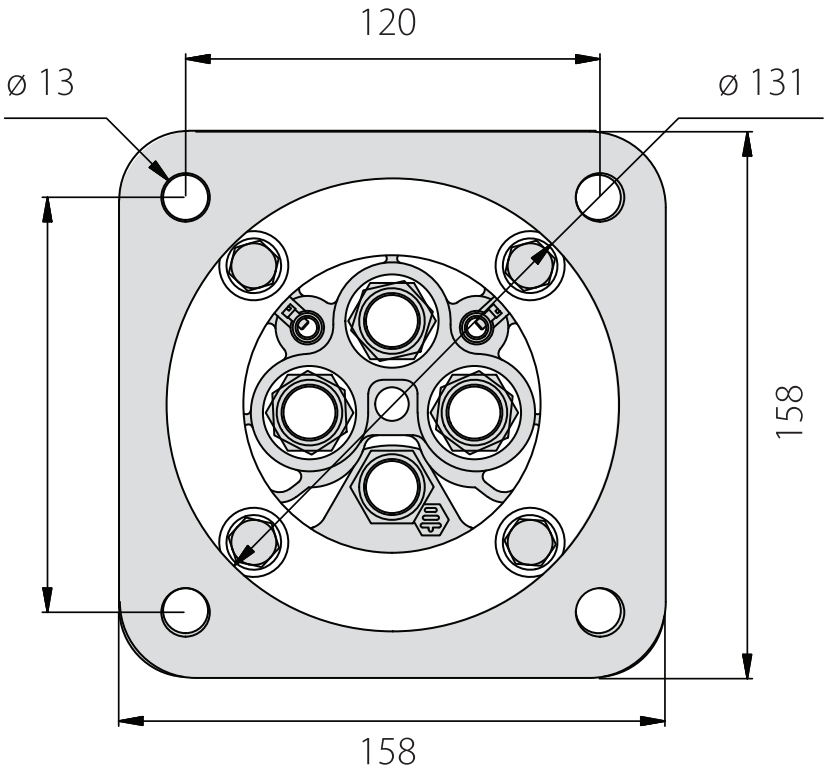

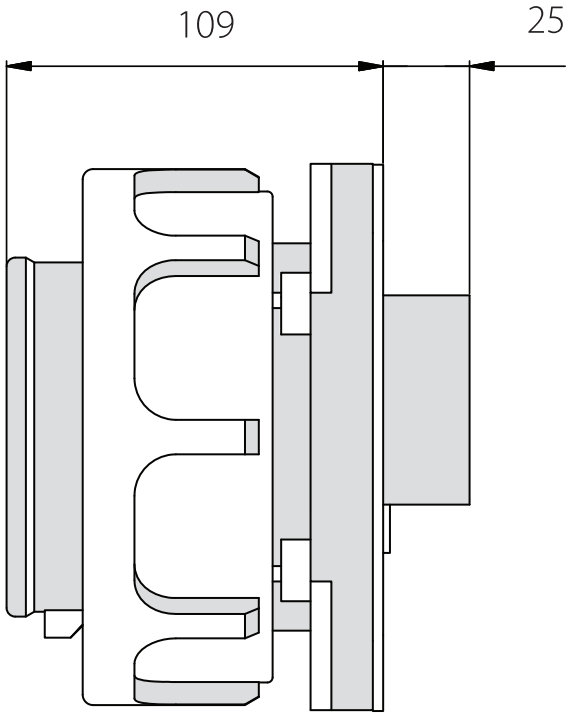

RELATED PRODUCTS

ACCESSORY

Item No: 3PV5PC

Required: No

Description: PROCONECT 3PV5 Appliance Inlet, Plug Cap

Published on 04 September 2026