V4DE450V

PROCONECT 3PV4 Socket Outlet, 3P+N+E+2p, 250A, suits 50-70mm2 w/ Screw Terminals

HIGH CURRENT PLUGS

PROCONECT®



Component type	Round socket/plug for high currents
Range	3PX/3PV
Model	N/A
Product status	Existing

The Proconect 3PX and 3PV range of high-current plugs and sockets suit a variety of industries including mining, marine, transportation, and commercial. Available in either a screw ring (3PV) or push-pull connection (3PX) type. Current ratings of 160A to 660A (at 3.3 kV) and corrosion-proof aluminium construction make it ideal for the harsh Australian environment.

ELECTRICAL	Amperage	250 A
	Voltage	1-3300 V
	Contact configuration	3P+N+E+2P
CONSTRUCTION	Construction type	Outlet
	Material insulation body	Other
	Contact material	Other
	Material screw	Stainless steel
	IP rating	IP67
DIMENSIONS	Width	116 mm
	Length	116 mm
	Weight	1.7 kg
ENVIRONMENT	Operating temperature	-30…60 °C

Published on 04 September 2026

V4DE450V

PROCONECT 3PV4 Socket Outlet, 3P+N+E+2p, 250A, suits 50-70mm2 w/ Screw Terminals

HIGH CURRENT PLUGS

PROCONECT®

DIMENSIONAL DIAGRAM

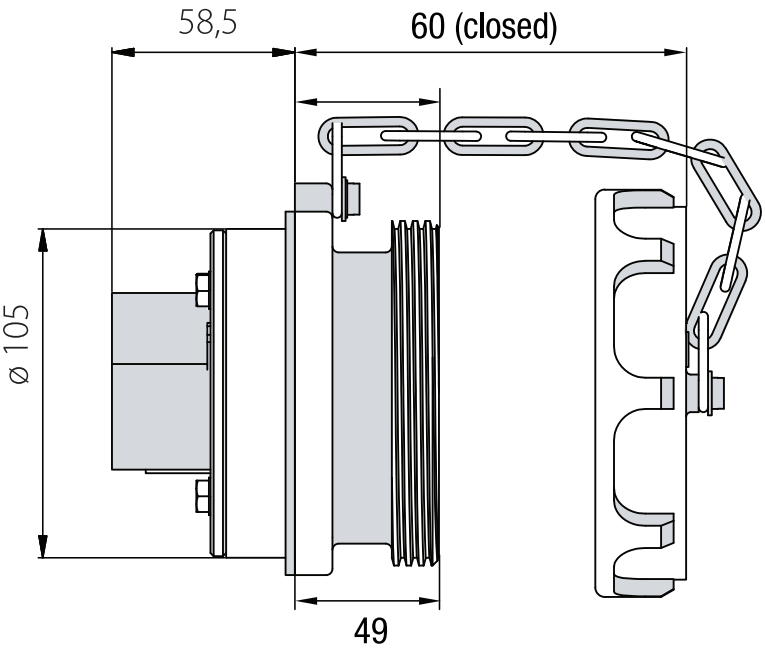

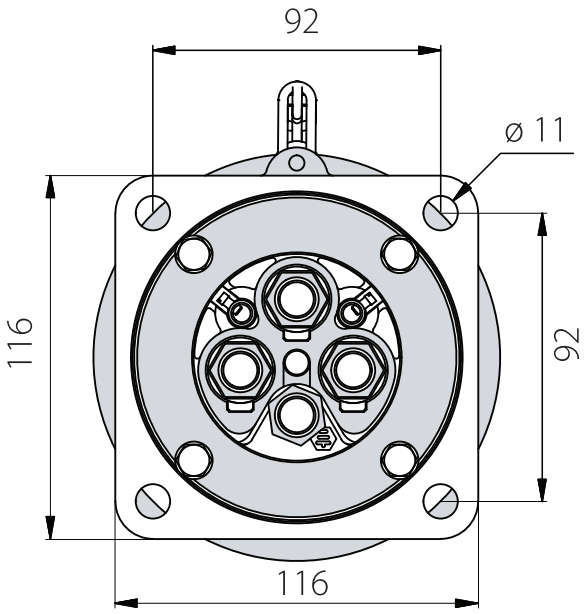

RELATED PRODUCTS

ACCESSORY



Item No: 3PV4PC

Required: No

Description: PROCONECT 3PV4 Appliance Inlet, Plug Cap

Published on 04 September 2026