V4CE350V

PROCONECT 3PV4 Extension Socket, 3P+E+2p, 250A, suits 50-70mm2 cable, w/ Screw Terminals

HIGH CURRENT PLUGS

PROCONECT®

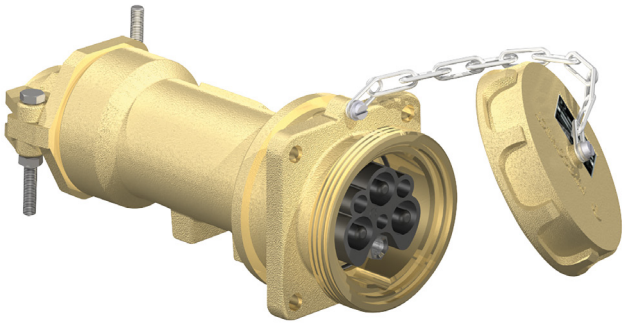

Component type	Round socket/plug for high currents
Range	3PX/3PV
Model	N/A
Product status	Existing

The Proconect 3PX and 3PV range of high-current plugs and sockets suit a variety of industries including mining, marine, transportation, and commercial. Available in either a screw ring (3PV) or push-pull connection (3PX) type. Current ratings of 160A to 660A (at 3.3 kV) and corrosion-proof aluminium construction make it ideal for the harsh Australian environment.

ELECTRICAL	**Amperage**	250 A
	Voltage	1-3300 V
	Contact configuration	3P+E+2P
CONSTRUCTION	**Construction type**	Coupling
	Material insulation body	Other
	Contact material	Other
	Material screw	Stainless steel
	IP rating	IP67
DIMENSIONS	**Width**	130 mm
	Length	303 mm
	Weight	2.7 kg
ENVIRONMENT	**Operating temperature**	-30…60 °C

Published on 04 September 2026

V4CE350V

PROCONECT 3PV4 Extension Socket, 3P+E+2p, 250A, suits 50-70mm2 cable, w/ Screw Terminals

HIGH CURRENT PLUGS

DIMENSIONAL DIAGRAM

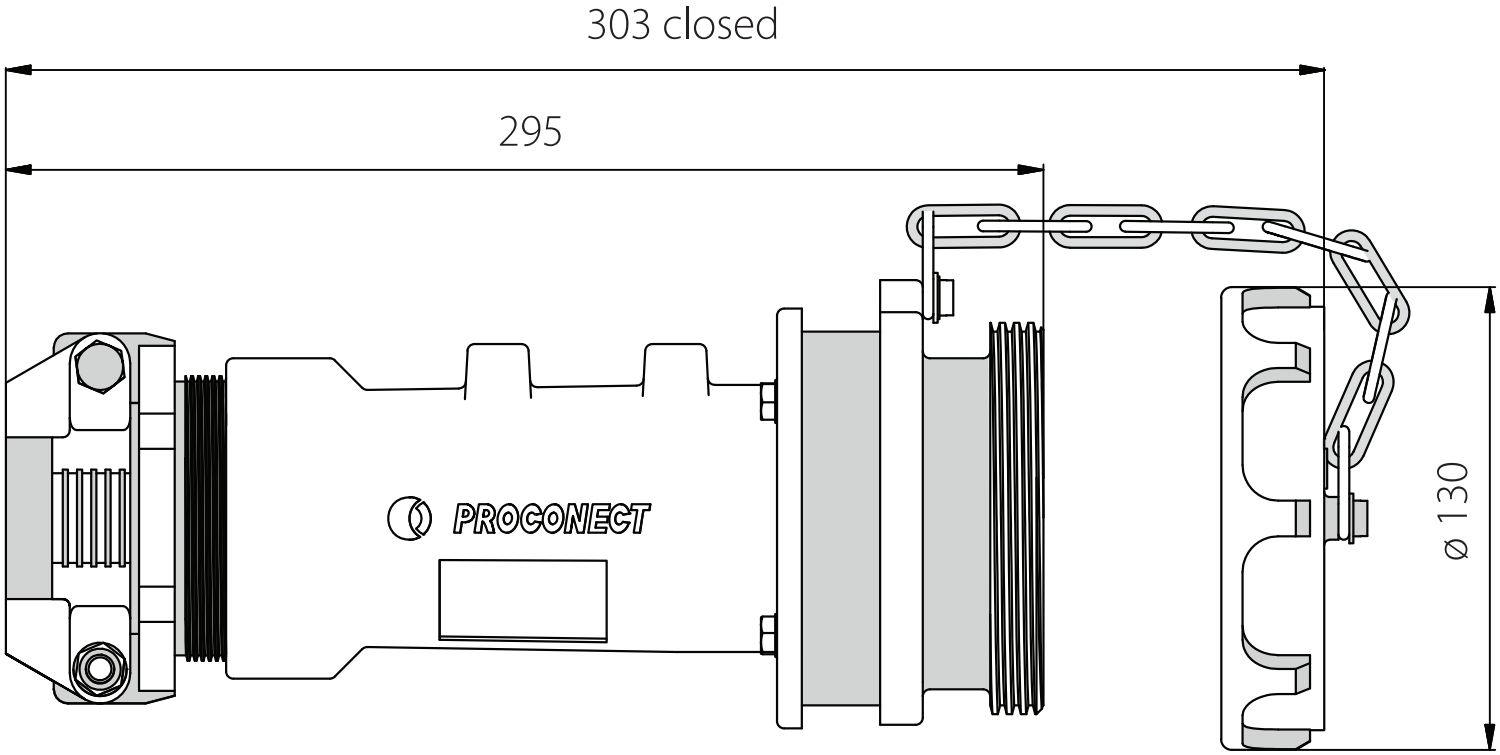

RELATED PRODUCTS

ACCESSORY

Item No: 3PV4PC

Required: No

Description: PROCONECT 3PV4 Appliance Inlet, Plug Cap

Published on 04 September 2026