TAS65H8001A

IME TAS65 Solid Core Current Transformer Horizontal 800A/1A 65 x 32mm 15VA Class 1, 12VA Class 0.5

CURRENT TRANSFORMERS AND TRANSDUCERS

IME

Component type	Current transformer
Range	Solid Core CT
Model	N/A
Product status	Existing

The IME solid core current transformers are highly accurate and cover a broad range of sizes and form factors that suit busbar, cable, or protection class applications.

ELECTRICAL	Primary rated current	800 A
	Secondary rated current	1 A
	Rated operating frequency	47-63 Hz
	Max. operating voltage (Umax)	0.72 V
	Rated short time thermal current Ith (x primary current)	48 kA
	Rated continuous thermal current Icth (x primary current)	48 kA
	Accuracy class	0.5
	Insulation class (IEC 61869-1, 61869-2)	B
	Security factor	5
	Rated burden, class 0.5	12 VA
	Rated burden, class 1	15 VA
	Power loss	20 W
	Over current limiting factor	FS 5
	Secondary rated apparent power	12 VA
CONSTRUCTION	Current transformer type	Solid core
	Material housing	Polycarbonate (PC)
	Model	Attachable current transformer
	With shock protection	Yes
	Snap mounting	Yes
	Secondary connection	Screw connection
	Number of primary inputs	1
ENVIRONMENT	Storage temperature	-40…85 °C

Published on 13 December 2024

TAS65H8001A

IME TAS65 Solid Core Current Transformer Horizontal 800A/1A 65 x 32mm 15VA Class 1, 12VA Class 0.5

CURRENT TRANSFORMERS AND TRANSDUCERS

DIMENSIONAL DIAGRAM

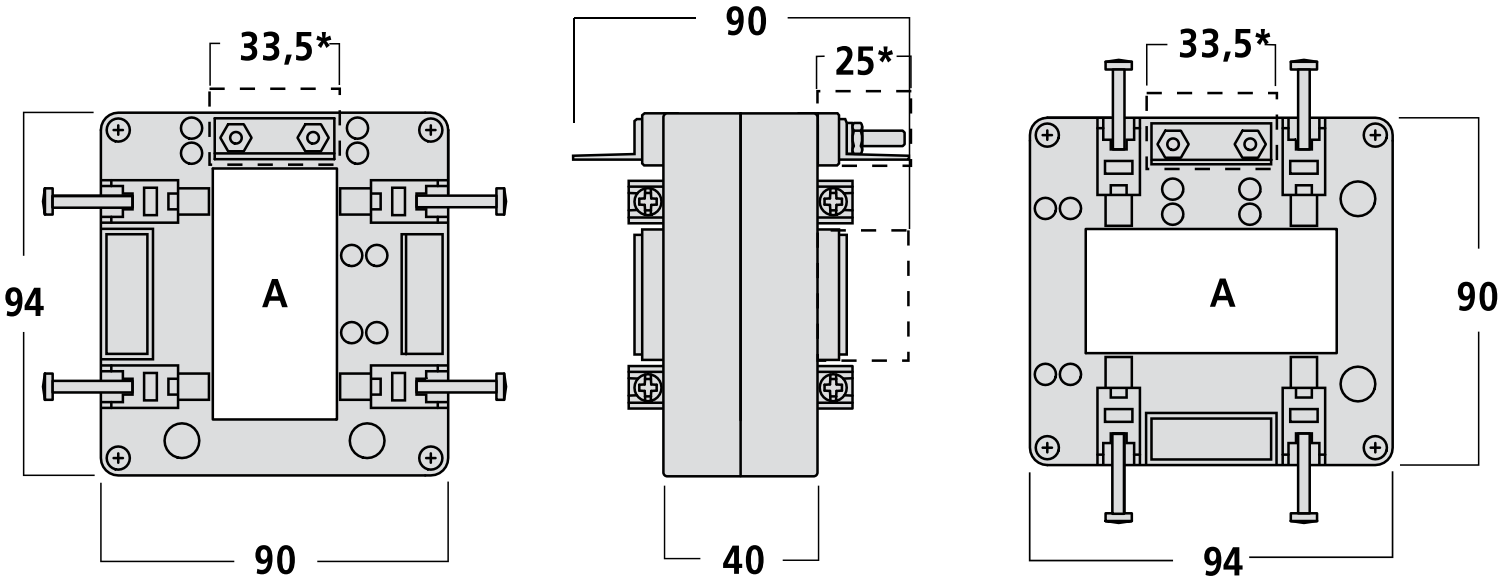

*Opzione/Option

Published on 13 December 2024