TA327801A

IME TA327 Solid Core Current Transformer 80A/1A 27mm 3.5VA Class 3, 2.5VA Class 1

CURRENT TRANSFORMERS AND TRANSDUCERS

IME

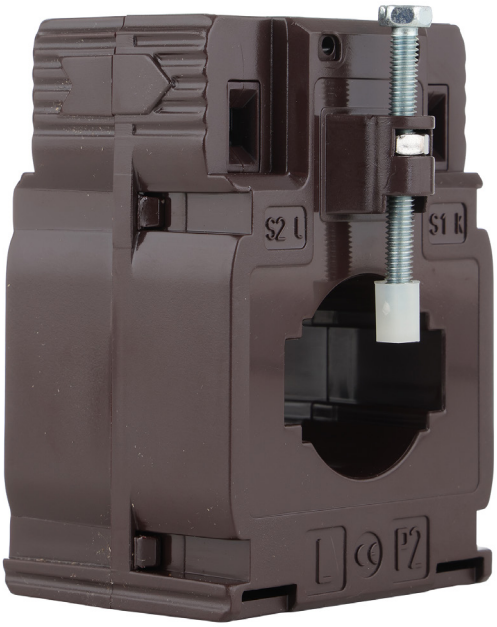

Component type	Current transformer
Range	Solid Core CT
Model	N/A
Product status	Existing

The IME solid core current transformers are highly accurate and cover a broad range of sizes and form factors that suit busbar, cable or protection class applications.

ELECTRICAL	**Primary rated current**	80 A
	Secondary current on CT	1 A
	Rated operating frequency	47-63 Hz
	Max. operating voltage (Umax)	0.72 V
	Rated short time thermal current Ith (x primary current)	4.8 kA
	Rated continuous thermal current Icth (x primary current)	4.8 kA
	Accuracy class	1
	Insulation class (IEC 61869-1, 61869-2)	B
	Security factor	5
	Rated burden, class 1	2.5 VA
	Power loss	7 W
	Over current limiting factor	FS 5
	Secondary rated apparent power	2.5 VA
CONSTRUCTION	**Current transformer type**	Solid core
	Material housing	Polycarbonate (PC)
	Model	Attachable current transformer
	With shock protection	Yes
	Snap mounting	Yes
	Secondary connection	Screw connection
	Number of primary inputs	1
DIMENSIONS	**Opening diameter**	27 mm
ENVIRONMENT	**Storage temperature**	-40…85 °C

Published on 01 December 2025

TA327801A

IME TA327 Solid Core Current Transformer 80A/1A 27mm 3.5VA Class 3, 2.5VA Class 1

CURRENT TRANSFORMERS AND TRANSDUCERS

IME

DIMENSIONAL DIAGRAM

***Opzione / Option**

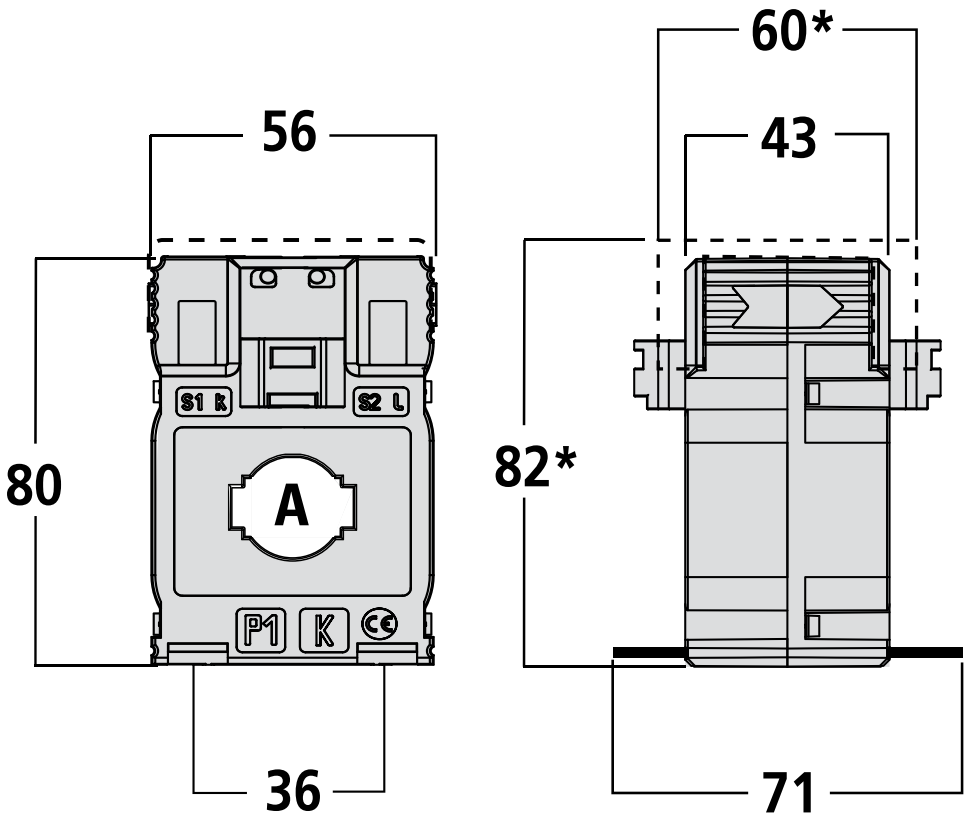

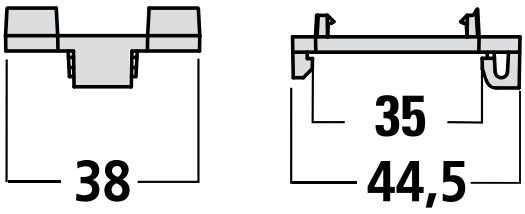

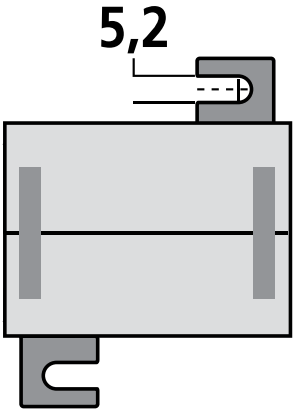

Fissaggio per binario DIN
DIN rail mounting

Fissaggio a vite
Screw type mounting

Published on 01 December 2025