RSFDN6303P

Socomec Remote Fuse Switch RSF BS 3P 630A 230V External Handle

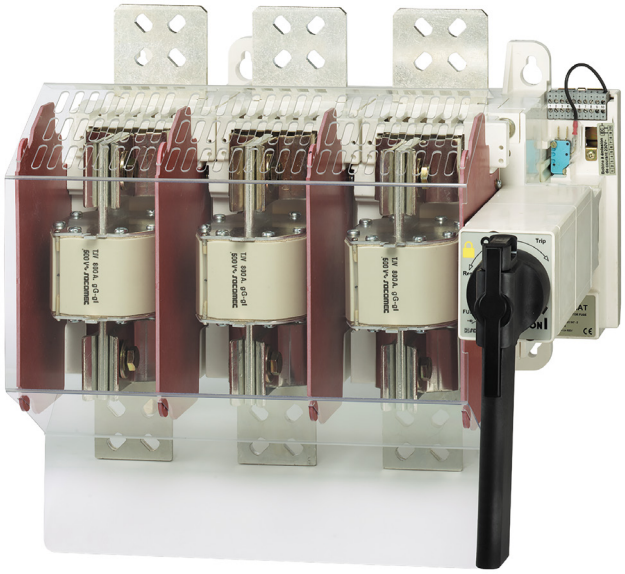

Component type	Fuse switch disconnector
Range	Fuse Switch
Model	N/A
Alternative	CALL FOR ALTERNATIVE

The Socomec SSF standard fuse switches boast IP 30 protection on all fuse terminals in a compact yet effective design. These fuse switches feature a test position and double-break contacts per phase, allowing the safe isolation of AC or DC circuits as well as the added short circuit protection offered by DIN/BS type HRC fuses.

ELECTRICAL	Rated current	630 A
	Max. rated operation voltage Ue AC	690 V
	Max. rated operation voltage Ue DC	440 V
	Rated permanent current at AC-21, 400 V	630 A
	Rated permanent current at AC-23, 400 V	630 A
	Rated operation current Ie at DC-21, 220 V	400 A
	Rated operation current Ie at DC-21, 440 V	400 A
	Rated operation current Ie at DC-22, 220 V	315 A
	Rated operation current Ie at DC-22, 440 V	315 A
	Rated operation current Ie at DC-23, 440 V	400 A
	Short time withstand current Icw, 1 sec	80 kA
	Rated impulse withstand voltage Uimp	12 kV
	Rated insulation voltage Ui	1000 V
	Rated operation power at AC-23, 400 V	355 kW
CONSTRUCTION	Degree of protection (IP), front side	IP30
MECHANICAL	Suitable for fuses	NH3
	Mechanical life (service cycles)	5000 cycles
DIMENSIONS	Height	300 mm
	Width	345.5 mm
	Depth	268 mm

Published on 21 July 2026

RSFDN6303P

Socomec Remote Fuse Switch RSF BS 3P 630A 230V External Handle

DIMENSIONAL DIAGRAM

FUSOMAT BS 250 to 800 A
FUSOMAT DIN 250 to 630 A

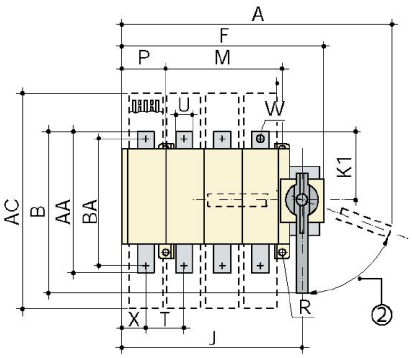

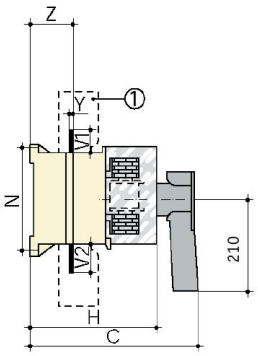

External front operation

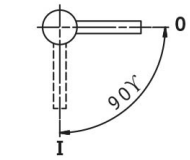

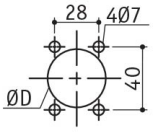

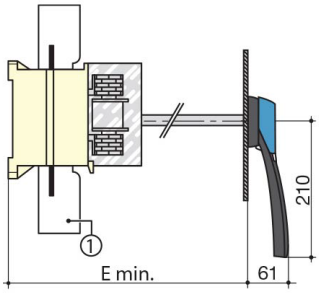

① Terminal shrouds
② Reset 70°

Rating	Overall dimensions (mm)					Terminal shrouds	Switch body						Switch mounting					Connections/terminals										
(A)	A 3p.	A 4p.	B	C	E	AC	F 3p.	F 4p.	H	J 3p.	J 4p.	K1	M	N	P 3p.	P 4p.	R	T	U	V1	V2	W	X 3p.	X 4p.	Y	Z	AA	BA
250	435	495	305	307	297...343	380	285	345	221	253	313	115	210	180	10	70	7	65	32	35	43	11	31	46	3	67	238	208
400	435	495	305	307	293...343	380	285	345	221	253	313	115	210	180	10	70	7	65	32	35	43	13	31	46	5	69	238	208
630	490.5	570.5	350	348	341...440	470	345.5	425.5	268	308	388	150	250	250	20	100	9	80	50	50	50	13	36	65	7	72	300	260
800	490.5	570.5	350	348	341...440	470	345.5	425.5	268	308	388	150	250	250	20	100	9	80	50	50	50	13	36	65	7	72	300	–

Published on 21 July 2026