RC601W2M40C130CX

Steute Non-contact Interlock Safety Magnetic Sensor Extreme High Low Temperature Plastic 1 CO 2m

LIMIT SWITCHES

.steute



Component type	Magnetic proximity switch
Range	ST Limit Switch
Model	N/A
Product status	Existing

Steute Technology Position Limit switches are the perfect solution when moving parts are to be positioned, controlled or monitored on machines and plants. The actuating element detects the final position and sends communication via the switching contact to the superordinate receiver or control system. Available in a wide range of position switches with or without safety functions.

ELECTRICAL	Type of actuation	Magnet
	Switching distance	33 mm
	Type of switching output	Dry reed contact
	Max. load current	0.5 A
	Type of electric connection	Cable
	Switching frequency	200 Hz
	Number of conductors	2
CONSTRUCTION	Construction type housing	Cylinder plain
	Material housing	Plastic
MECHANICAL	With status indication	No
DIMENSIONS	Length of sensor	108 mm
	Diameter sensor	12 mm
ENVIRONMENT	Ambient temperature	-40…130 °C

Published on 29 October 2026

RC601W2M40C130CX

Steute Non-contact Interlock Safety Magnetic Sensor Extreme High Low Temperature Plastic 1 CO 2m

LIMIT SWITCHES

.steute

DIMENSIONAL DIAGRAM

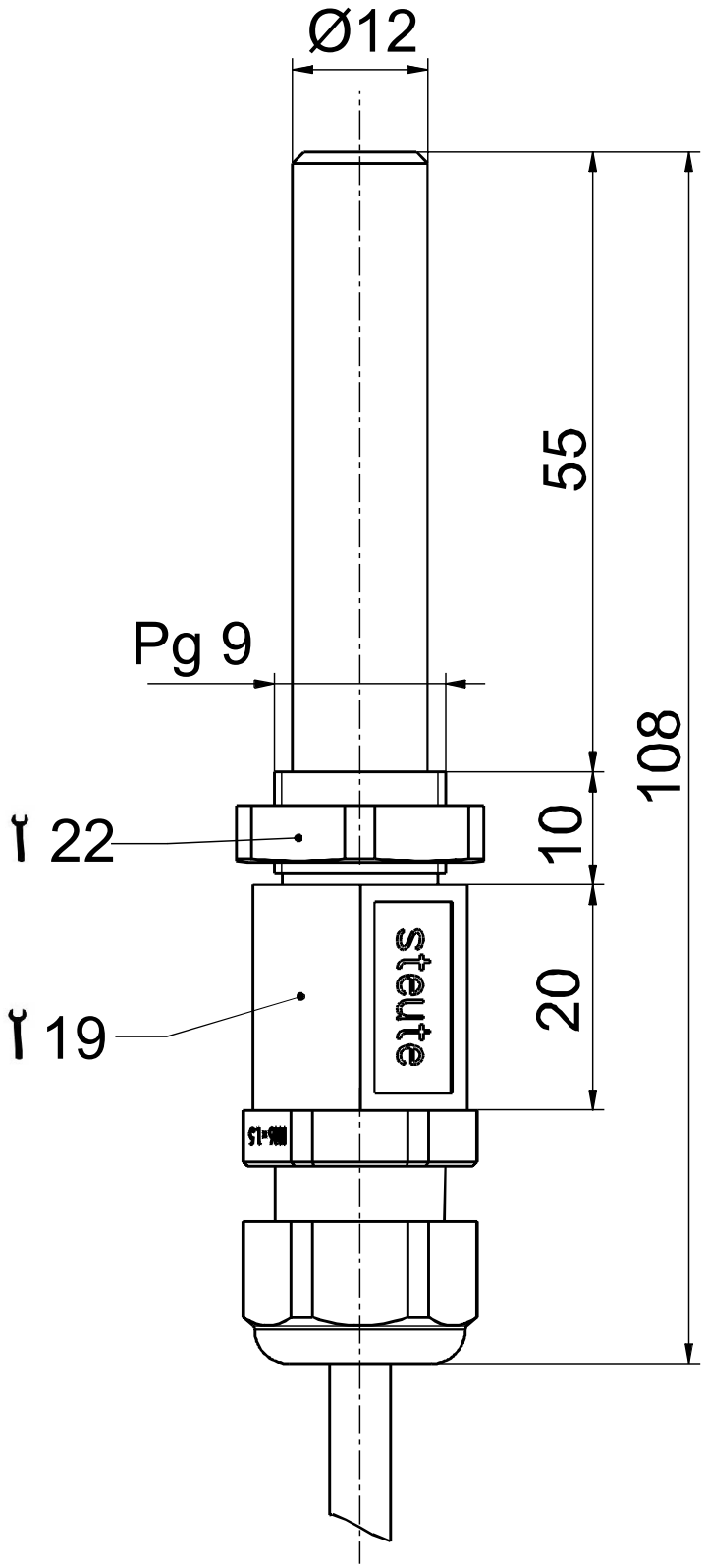

Published on 29 October 2026