PUB01CB23500V

Carlo Gavazzi Monitoring Relay 1 Phase 2-500V AC DC Over or Under Voltage 115 to 230V AC Supply 1CO

MONITORING RELAYS



Component type	Voltage monitoring relay
Range	V/I/PH/PF Monitoring
Model	N/A
Alternative	CALL FOR ALTERNATIVE

The Carlo Gavazzi range of monitoring relays are designed for the detection of phase loss and incorrect phase sequence to over/under current and voltage. Suitable for use in a wide range of applications that require protection against people, fire, earth current leakage, or incorrect mains or cable connections. Installation is easy with front dials and DIP switches.

ELECTRICAL	Type of voltage measuring range	AC/DC
	Voltage measuring range 1	2-20 V
	Voltage measuring range 2	5-50 V
	Voltage measuring range 3	20-200 V
	Voltage measuring range 4	50-500 V
	Rated frequency	45-65 Hz
	Single-phase under voltage possible	Yes
	Single-phase over voltage possible	Yes
	Contains function DC-over voltage	Yes
	Contains function DC-voltage hysteresis	Yes
	Number of contacts as change-over contact	1
	Rated operation current Ie	8 A
	Rated operation current Ie at AC-15, 230 V	2.5 A
	Rated operation current Ie at DC-12, 24 V	5 A
	Rated operation current Ie at DC-13, 24 V	2.5 A
	Voltage type for actuating	AC
	Control supply voltage Us at AC 50HZ	230 V
	Control supply voltage AC, 2nd input	115 V
	Over voltage category	III
	Type of electric connection	Screw connection
	Min. adjustable delay-on energization time	1 s
	Max. permitted delay-on energization time	6 s
CONSTRUCTION	Material contact	Silver tin-oxide
	Suitable for plug-in socket mounting	Yes
	IP rating	IP20
DIMENSIONS	Height	83.5 mm

Published on 22 May 2026

PUB01CB23500V

Carlo Gavazzi Monitoring Relay 1 Phase 2-500V AC DC Over or Under Voltage 115 to 230V AC Supply 1CO

MONITORING RELAYS

DIMENSIONS	Width	22.5 mm
	Depth	99.5 mm
	Weight	0.15 kg
ENVIRONMENT	Storage temperature	-30…80 °C

DIMENSIONAL DIAGRAM

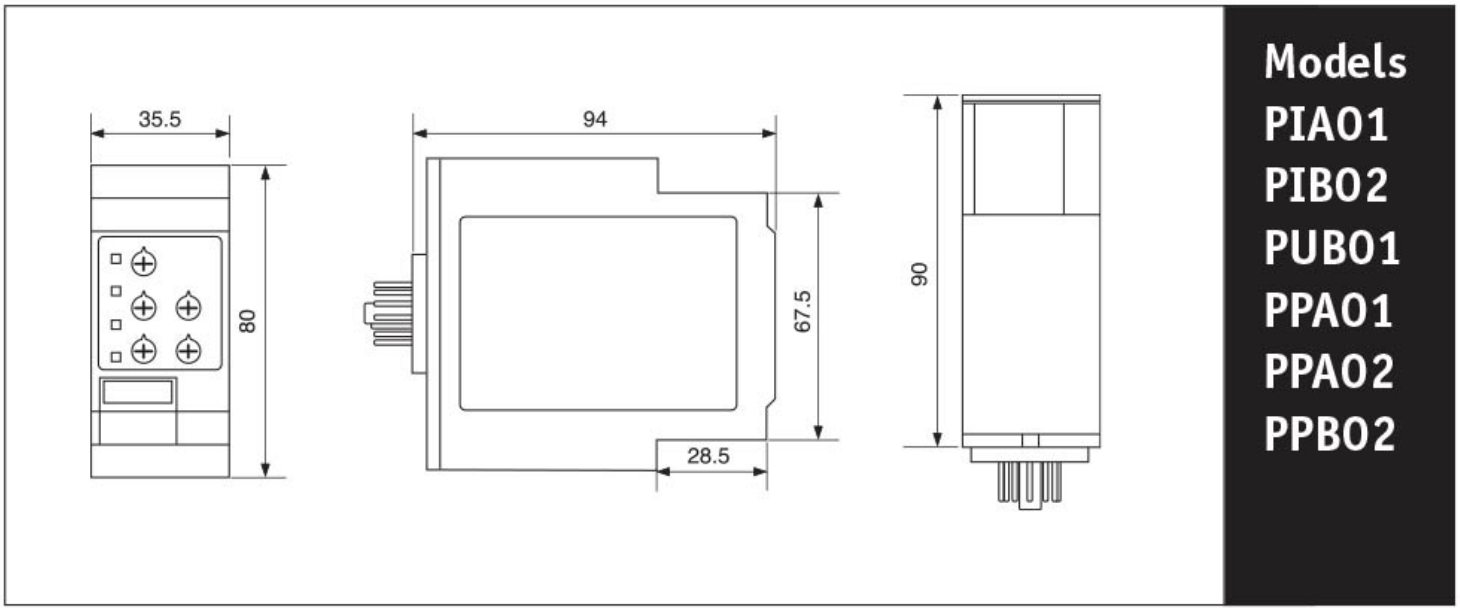

Published on 22 May 2026