PQSVGC50030OXFFCX1A

Delta SVG/APF/Hybrid IP30 Cabinet 5x 100kVAr/A Power Modules Front Connect Orange

POWER FACTOR CORRECTION



Component type	Energy management controller
Range	TPFC
Model	N/A
Product status	Existing

The Delta Hybrid system is a modular solution that combines the APF and SVG systems to provide dedicated displacement and distortion power correction in a single cabinet. Providing a high harmonic filtering rate (>98%) for harmonics from the 2nd to the 50th order, with a fast response time (<20 ms) the hybrid serves as an all-in-one solution to boost the true power factor of an electrical network.

ELECTRICAL	**Application**	Power quality
	Supply voltage	380-415 V
	Voltage type of supply voltage	AC
	Number of phases	3
	Rated frequency	50-60 Hz
	Rated current	500 A
CONSTRUCTION	**Type of enclosure**	Floor mounting
	Number of module positions	5
	Number of empty module positions	5
	Colour	Orange
	RAL-number	2000
	IP rating	IP30
	Suitable for outdoor set-up	No
DIMENSIONS	**Width**	808 mm
	Depth	1000 mm
	Height	1956 mm
	Weight	350 kg

Published on 09 October 2026

PQSVGC50030OXFFCX1A

Delta SVG/APF/Hybrid IP30 Cabinet 5x 100kVAr/A Power Modules Front Connect Orange

POWER FACTOR CORRECTION

DIMENSIONAL DIAGRAM

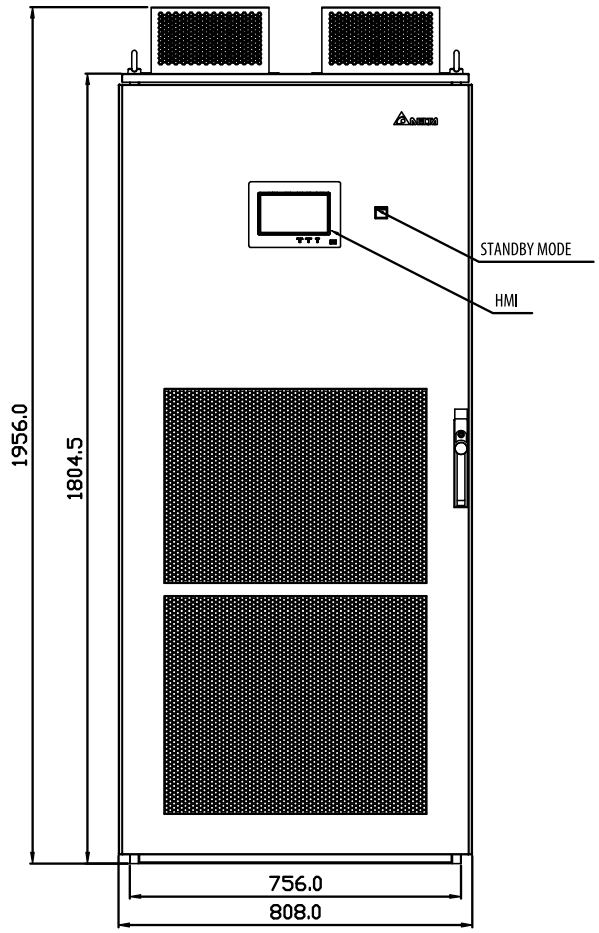

front view (with door)

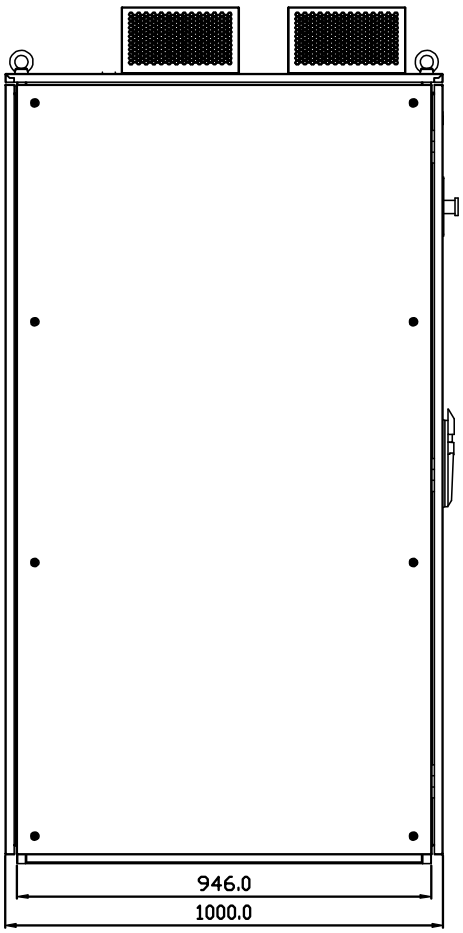

side view (with door)

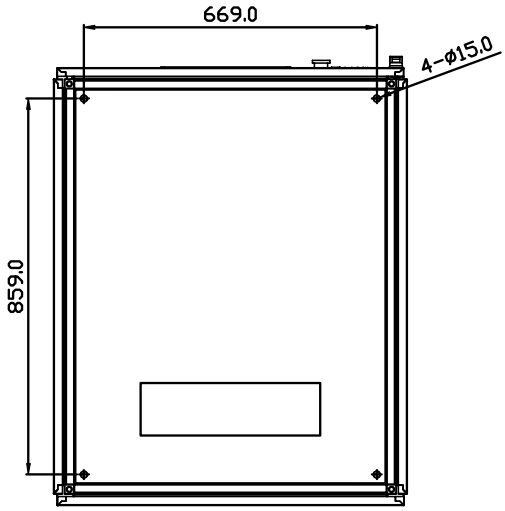

bottom view

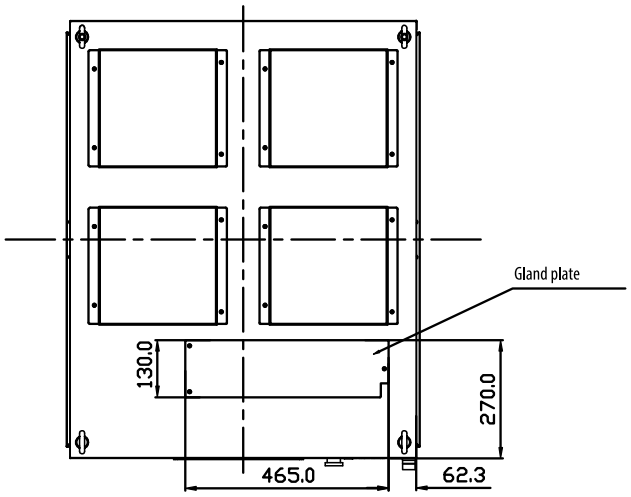

top view

Published on 09 October 2026