PIA01CB235A

Carlo Gavazzi Monitoring Relay Precise Over or Input via Int-Shunt 0.5-5A ACDC and 115-230VAC 1CO

MONITORING RELAYS

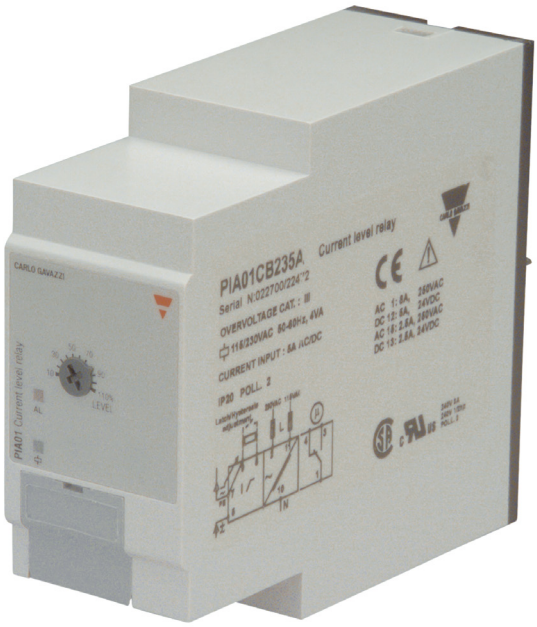

Component type	Current monitoring relay
Range	V/I/PH/PF Monitoring
Model	N/A
Alternative	CALL FOR ALTERNATIVE

The Carlo Gavazzi range of monitoring relays are designed for the detection of phase loss and incorrect phase sequence to over/under current and voltage. Suitable for use in a wide range of applications that require protection against people, fire, earth current leakage, or incorrect mains or cable connections. Installation is easy with front dials and DIP switches.

ELECTRICAL	Current measuring range	0.5-5 A
	External current transformer	Yes
	Single-phase over current possible	Yes
	Rated frequency	45-65 Hz
	Contains function DC-voltage over current	Yes
	Number of contacts as change-over contact	1
	Rated operation current Ie	8 A
	Rated operation current Ie at AC-15, 230 V	2.5 A
	Rated operation current Ie at DC-12, 24 V	5 A
	Rated operation current Ie at DC-13, 24 V	2.5 A
	Voltage type for actuating	AC
	Control supply voltage AC, 2nd input	115 V
	Control supply voltage Us at AC 50HZ	230 V
	Over voltage category	III
	Type of electric connection	Plug-in connection
	Single-phase hysteresis possible	Yes
CONSTRUCTION	Material contact	Silver tin-oxide
	Suitable for plug-in socket mounting	Yes
	IP rating	IP20
DIMENSIONS	Height	80 mm
	Width	36 mm
	Depth	94 mm
	Weight	0.15 kg
ENVIRONMENT	Storage temperature	-30…80 °C

Published on 22 May 2026

PIA01CB235A

Carlo Gavazzi Monitoring Relay Precise Over or Input via Int-Shunt 0.5-5A ACDC and 115-230VAC 1CO

MONITORING RELAYS

DIMENSIONAL DIAGRAM

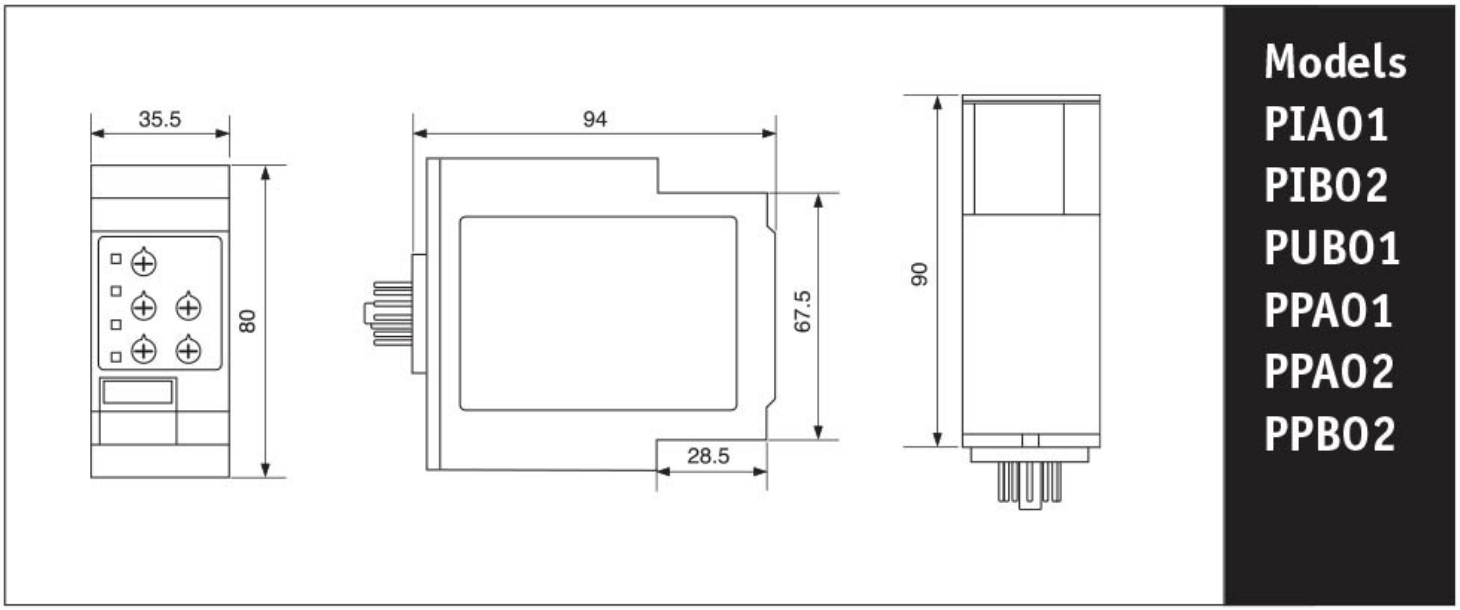

Published on 22 May 2026