PCS025480V

S+S PCS Soft Starter 480V 25A ND3W 100 to 240VAC Control



Component type	Soft starter
Range	Soft Starter
Model	N/A
Product status	Existing

The Sprecher + Schuh PCS Softstarter Controller is specifically designed to start 3-phase motors (up to 460V / 575V), in a compact, easy to use and DIN-rail mountable for models up to 85A.

ELECTRICAL	Rated power three-phase motor, inline, at 400 V	11 kW
	Rated power three-phase motor, inside delta, at 400 V	22 kW
	Rated operating voltage Ue	200-480 V
	Integrated motor overload protection	Yes
	Release class	Adjustable
	Internal bypass	Yes
	Voltage type for actuating	AC
	Rated control supply voltage Us at AC 50HZ	100-240 V
	Rated control supply voltage Us at AC 60HZ	100-240 V
	Function	Single direction
CONSTRUCTION	With display	No
	IP rating	IP2X
DIMENSIONS	Height	139.7 mm
	Width	44.8 mm
	Depth	110 mm
	Weight	0.86 kg
ENVIRONMENT	Rated surrounding temperature without derating	40 °C

Published on 02 October 2026

PCS025480V

S+S PCS Soft Starter 480V 25A ND3W 100 to 240VAC Control

DIMENSIONAL DIAGRAM

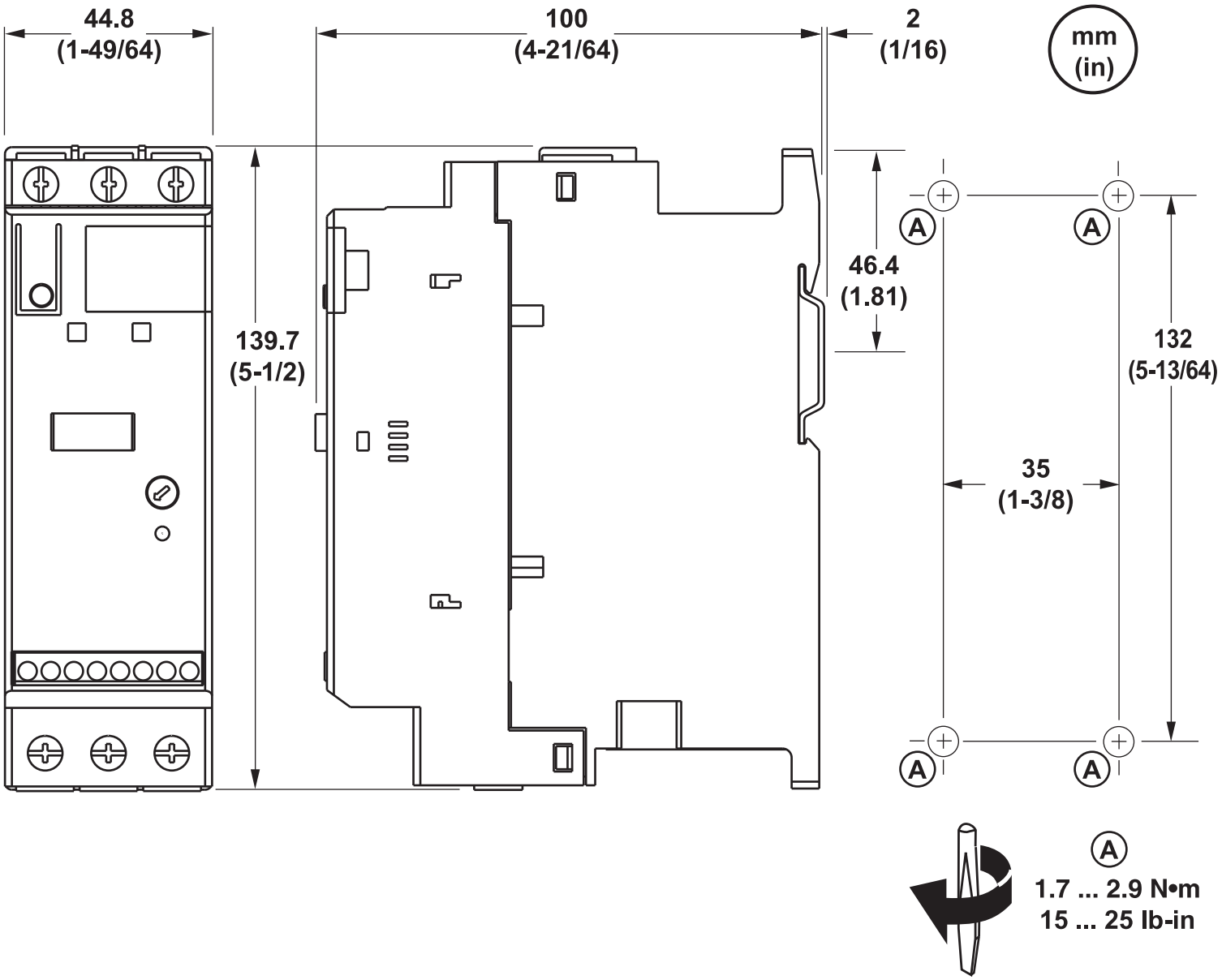

Published on 02 October 2026

PCS025480V

S+S PCS Soft Starter 480V 25A ND3W 100 to 240VAC Control

ELECTRICAL CONNECTION DIAGRAM

IEC

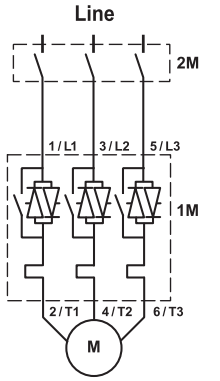

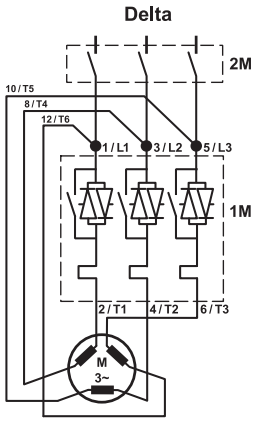

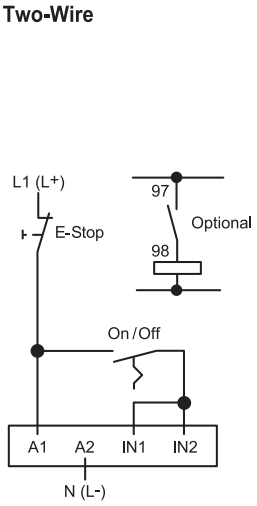

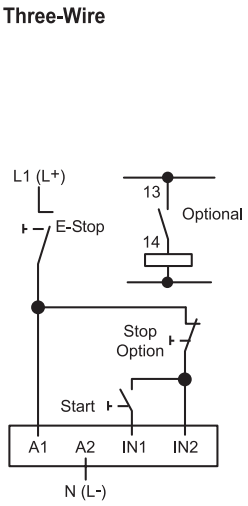

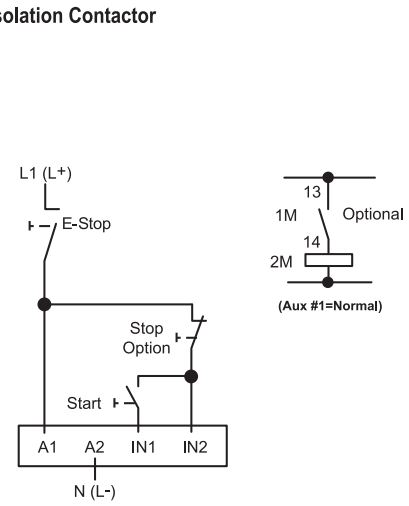

Published on 02 October 2026