PBLWAC35LDALI

Stanilite Single Point Platinum Batten IP65 1200mm Mains AC plus DALI 3500 Lumens



Component type	Ceiling-/wall luminaire
Range	Single Point Platinum Batten
Model	N/A
Alternative	WPB4FTACDALI

The Stanilite single point platinum batten range features larger terminals for faster installation, efficient lithium power and retrofittable to previous T8 profile installations.

ELECTRICAL	Nominal voltage	240 V
	Voltage type	AC
	Nominal operation time	75000 h
	Operating mode	Maintained
	Max. system power	28 W
CONSTRUCTION	Material housing	Plastic
	Colour housing	White
	Material cover	Plastic, opal
	IP rating	IP65
	With light source	Yes
MECHANICAL	Impact strength	IK08
PHOTOMETRIC	Lamp type	LED exchangeable
DIMENSIONS	Width	140 mm
	Length	1260 mm
	Height/depth	90 mm

Published on 02 October 2026

PBLWAC35LDALI

Stanilite Single Point Platinum Batten IP65 1200mm Mains AC plus DALI 3500 Lumens

DIMENSIONAL DIAGRAM

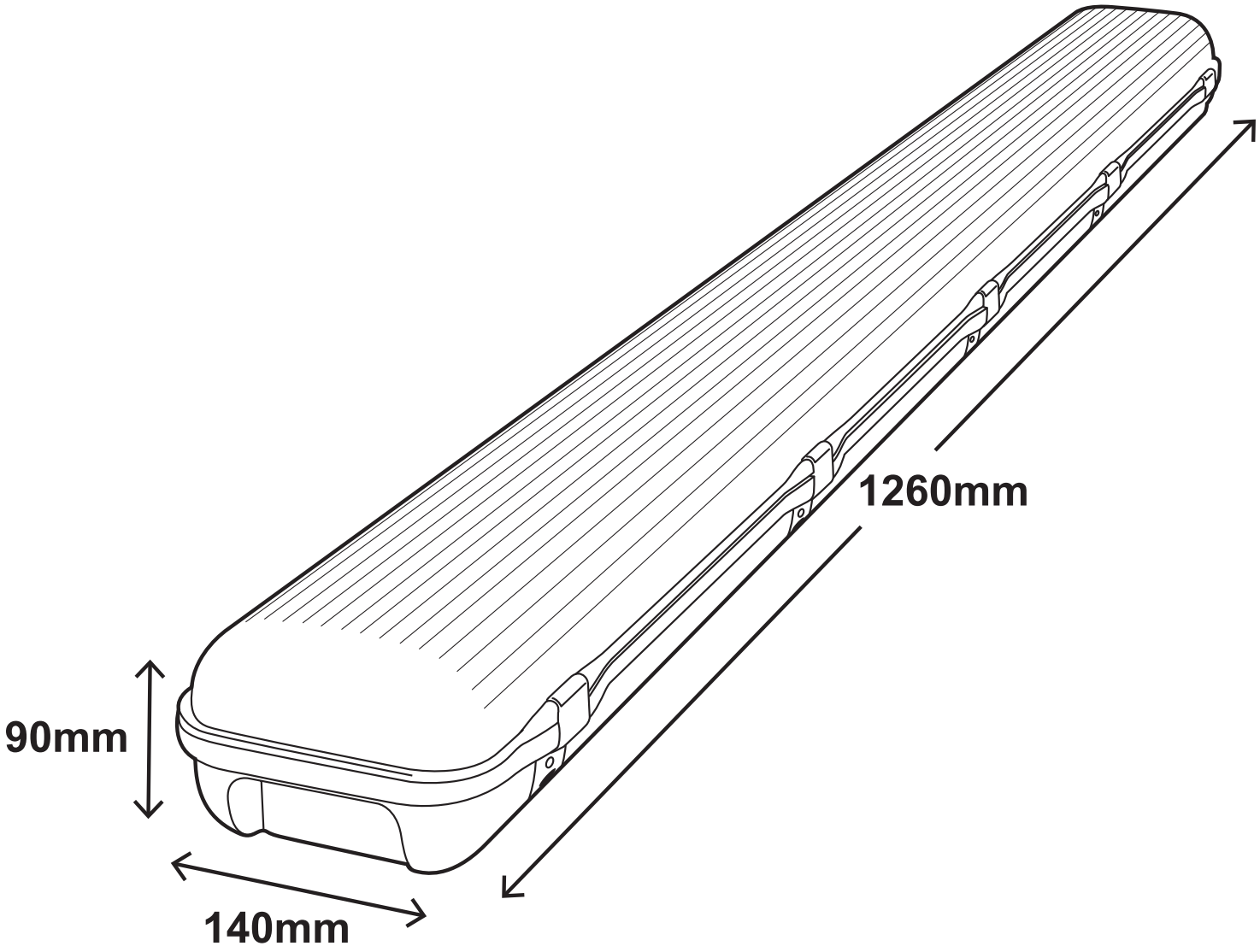

Published on 02 October 2026