PBL4RF46LM

Stanilite Nexus RF Platinum Batten IP44 1200mm Maintaned RF 4600 Lumens



Component type	Emergency luminaire
Range	Nexus RF Platinum Batten
Model	N/A
Product status	Existing

The Stanilite NexusRF Platinum batten range features an energy saving LED light source, efficient lithium power and is retrofittable to previous T8 profile installations.

ELECTRICAL	Operating mode	Maintained
	Nominal voltage	240 V
	Voltage type	AC
	Max. system power	39 W
	Nominal operation time	50000 h
COMMUNICATION	Monitoring equipment	Radio frequency (RF)
CONSTRUCTION	With remote switch connection	No
	With remote control	No
	Mounting method	Wall/ceiling/suspension
	With pictogram	No
	With light source	Yes
	Material housing	Steel
	Colour housing	White
	Material cover	Polycarbonate (PC)
	IP rating	IP40
MECHANICAL	Impact strength	IK06
PHOTOMETRIC	Lamp type	LED not exchangeable
	Photometric classification (C0)	D63
	Photometric classification	D40
DIMENSIONS	Width	80 mm
	Height/depth	65 mm
	Length	1200 mm
ENVIRONMENT	Rated ambient temperature according to IEC62722-2-1	0…40 °C
CERTIFICATES/APPROVALS	Compliant to AS/NZS CISPR 15	Yes
	Compliant to AS/NZS 2293.3:2018	Yes

Published on 17 April 2026

PBL4RF46LM

Stanilite Nexus RF Platinum Batten IP44 1200mm Maintaned RF 4600 Lumens

CERTIFICATES/APPROVALS		
	Compliant to AS/NZS 60598.1:2017	Yes
	Compliant to AS/NZS 60598.2.22:2005	Yes

DIMENSIONAL DIAGRAM

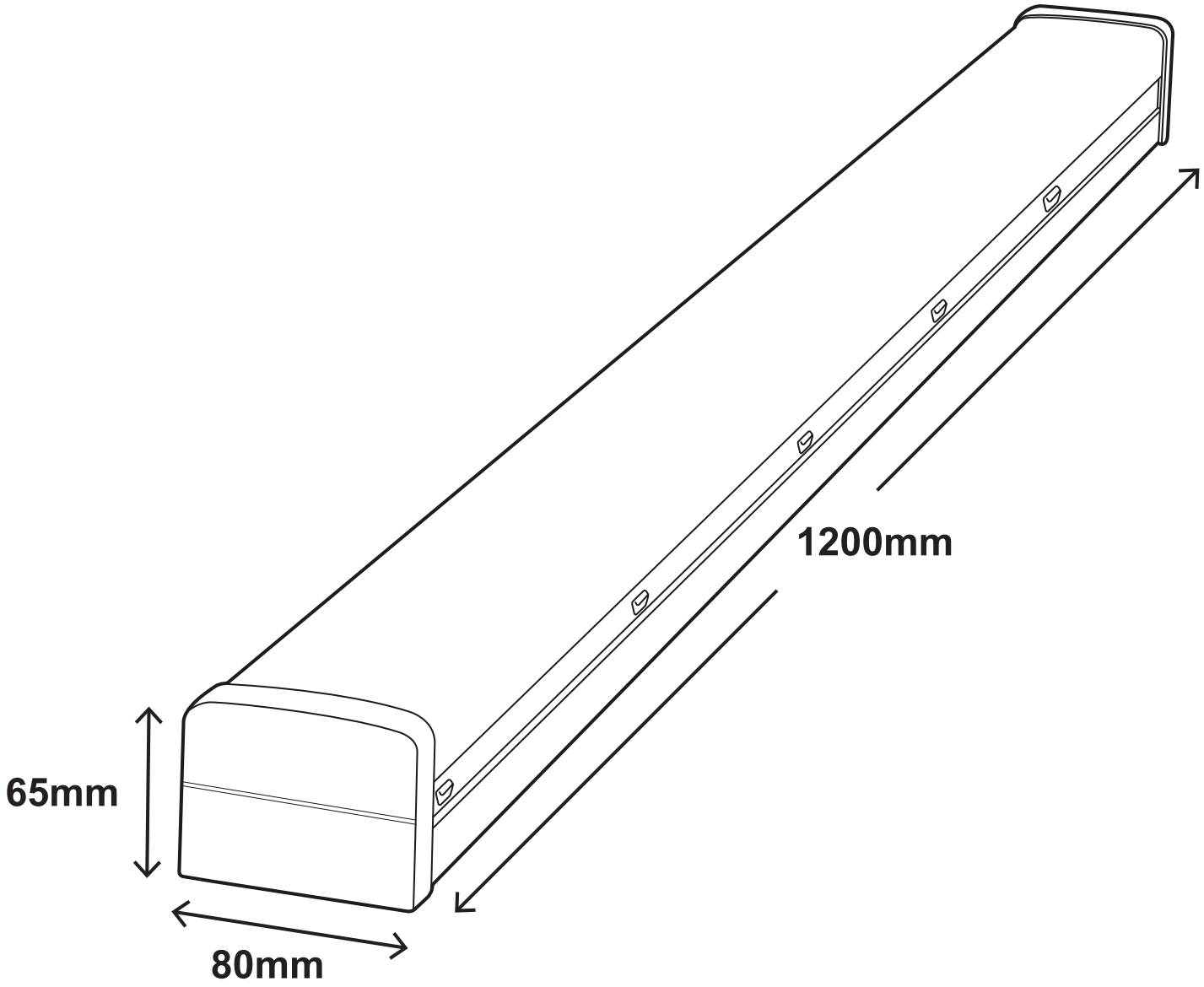

RELATED PRODUCTS

ACCESSORY



Item No: 0301227

Required: No

Description: Stanilite Emergency Battery Pack Lifepo4 6.4V 3.0Ah ECOBAT4EM PBL4EM



Item No: 0301307P

Required: No

Description: Stanilite Emergency Battery Pack Lifepo4 Side By Side Bracket 2C 6.4V 3.2Ah 3WR

Published on 17 April 2026