PBL4AC46L

Stanilite Single Point Platinum Batten IP44 1200mm Mains AC 4600 Lumens



Component type	Ceiling-/wall luminaire
Range	Single Point Platinum Batten
Model	N/A
Product status	Existing

The Stanilite single point platinum batten range features larger terminals for faster installation, efficient lithium power and retrofittable to previous T8 profile installations.

ELECTRICAL	Nominal voltage	240 V
	Voltage type	AC
	Nominal operation time	50000 h
	Operating mode	Maintained
	Max. system power	38 W
CONSTRUCTION	Material housing	Plastic
	Colour housing	White
	Material cover	Plastic, opal
	IP rating	IP40
	With light source	Yes
MECHANICAL	Impact strength	IK06
PHOTOMETRIC	Lamp type	LED exchangeable
DIMENSIONS	Width	80 mm
	Length	1200 mm
	Height/depth	65 mm

Published on 11 November 2026

PBL4AC46L

Stanilite Single Point Platinum Batten IP44 1200mm Mains AC 4600 Lumens

DIMENSIONAL DIAGRAM

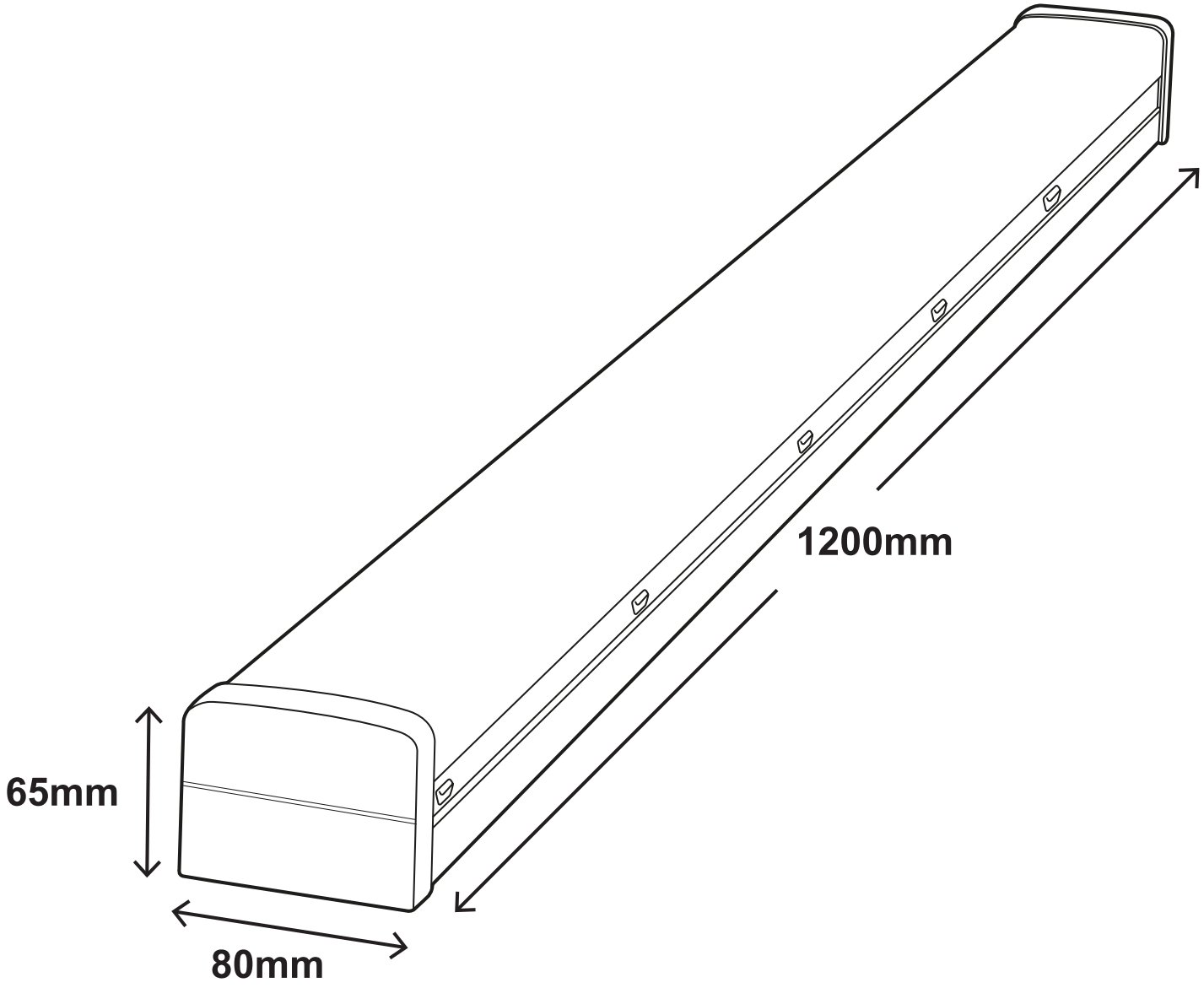

RELATED PRODUCTS

ACCESSORY



Item No: 0301227

Required: No

Description: Stanilite Emergency Battery Pack Lifepo4 6.4V 3.0Ah ECOBAT4EM PBL4EM



Item No: 0301307P

Required: No

Description: Stanilite Emergency Battery Pack Lifepo4 Side By Side Bracket 2C 6.4V 3.2Ah 3WR

Published on 11 November 2026

PBL4AC46L

Stanilite Single Point Platinum Batten IP44 1200mm Mains AC 4600 Lumens

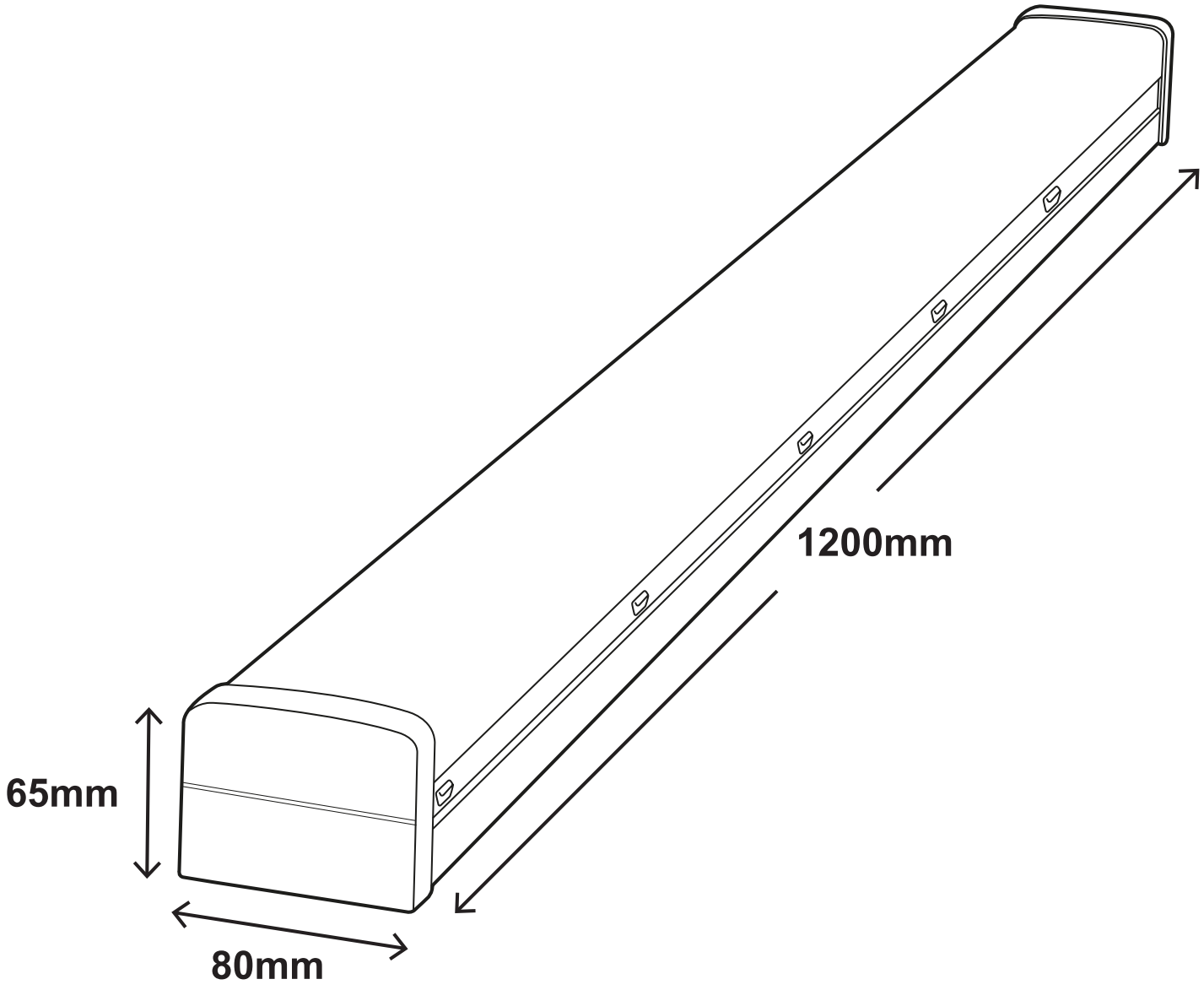

Published on 11 November 2026