MOLED19502WHB

Moflash LED195 48 LEDS Steady/Flashing Mode IP65 20 to 30V AC DC Wall or Surface Mnt Lens Blue

BEACONS



Component type	Signalling device
Range	LED Beacon
Model	N/A
Product status	Existing

The Moflash range of LED Beacons are a highly efficient and durable visual signalling solution for industrial and commercial applications. LED technology ensures a bright output, visible from a distance with a wide choice of colours, sizes, outputs, configurations, voltages, mounting options and a variety of operation modes such as flashing or rotating.

ELECTRICAL	Rated operation current Ie	0.12 A
	Nominal voltage	30-20 V
	Type of current	AC/DC
	Electricity consumption	0.12 A
COMMUNICATION	Compatible with Apple HomeKit	No
	Compatible with Google Assistant	No
	Compatible with Amazon Alexa	No
CONSTRUCTION	Type of indication	Optic
	Colour of lamp hood	Blue
	Mounting method	Other
	Material housing	Polycarbonate (PC)
	Colour housing	White
	IP rating	IP65
MECHANICAL	Suitable for ceiling mounting	Yes
PHOTOMETRIC	Lamp type	LED
	Illumination mode	Continuous light
DIMENSIONS	Weight	0.25 kg
ENVIRONMENT	Rated temperature	-25…55 °C

Published on 08 September 2026

MOLED19502WHB

Moflash LED195 48 LEDS Steady/Flashing Mode IP65 20 to 30V AC DC Wall or Surface Mnt Lens Blue

BEACONS

DIMENSIONAL DIAGRAM

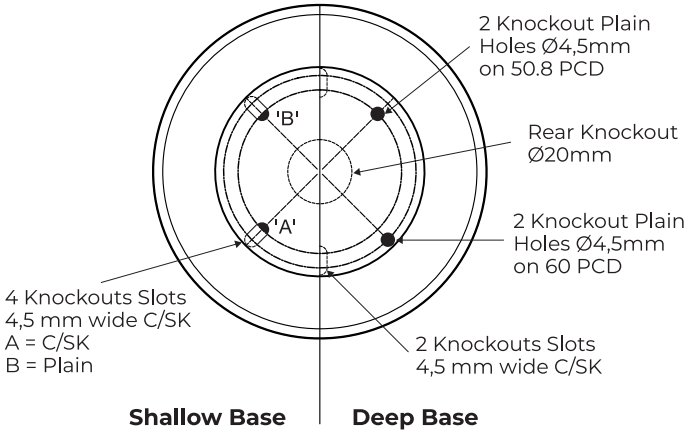

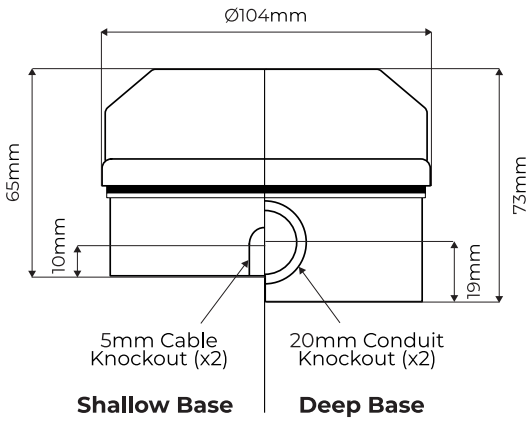

Published on 08 September 2026