MD6POACC21LG

NHP MOD6+ One Panelboard Accessory Module 432mm DIN 21 Way Light Grey

Component type	Empty cabinet
Range	MOD6+ One
Model	N/A
Product status	Existing

The MOD6+ One Panelboard offers a core range of essential features, including a IP40 compact enclosure with a neutral finish to blend in. Designed to suit MOD6 and MOD6+ MCBs and RCBOs.

CONSTRUCTION	Material housing	Steel
	Surface protection	Powder coating
	Colour	Grey
	Mounting method	Surface mounted (plaster)
	Material escutcheon	Mild steel
	Material plate thickness cabinet	1 mm
	Material plate thickness door/cover	1 mm
	Type of handle	Semi-flush
	Thickness of inner plate/escutcheon	1
	IP rating	IP40
	Type of cover	Door
	Type of door	Single
	Transparent cover/door	No
	With lock	Yes
	Number of rows	1
	RAL-number	7035
MECHANICAL	Number of modules	2
	Escutcheon	Yes
	Impact strength	IK07
DIMENSIONS	Height	432 mm
	Width	530 mm
	Depth	153 mm
ENVIRONMENT	Suitable for outdoor use	No

MD6POACC21LG

NHP MOD6+ One Panelboard Accessory Module 432mm DIN 21 Way Light Grey

DIMENSIONAL DIAGRAM

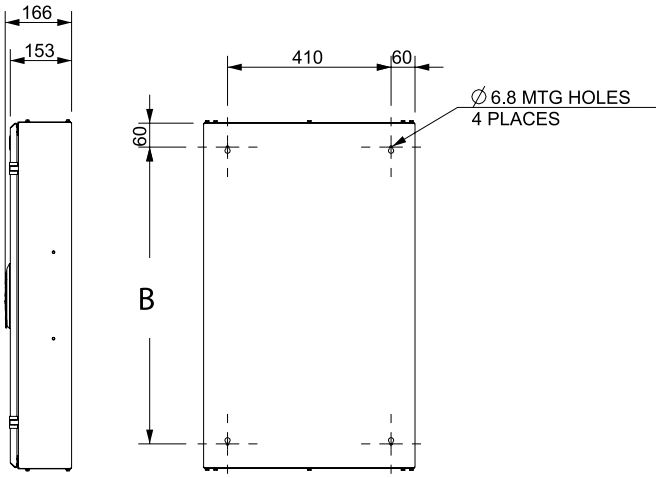

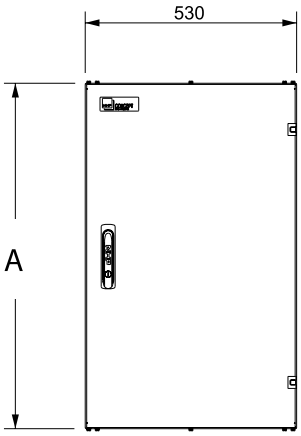

Module Size	A	B
2	432mm	312mm
3	648mm	528mm
4	864mm	744mm
5	1080mm	960mm
6	1296mm	1176mm

RELATED PRODUCTS

ACCESSORY

Item No: CELAELK1W

Required: No

Description: NHP Panelboard Accessory Emergency Lighting Test Unit Push Button Open Type

Item No: CELAELK2W

Required: No

Description: NHP Panelboard Accessory Emergency Lighting Test Unit Key Switch Open Type

Item No: CELEXTLK1

Required: No

Description: NHP Panelboard Accessory External Light Kit Time Clock 1 CH Contact 2 NO Contacts 25A

Item No: CELEXTLK2

Required: No

Description: NHP Panelboard Accessory External Light Kit Time Clock 2 CH Contacts 2 NO Contacts 25A

Published on 31 July 2026

MD6POACC21LG

NHP MOD6+ One Panelboard Accessory Module 432mm DIN 21 Way Light Grey

RELATED PRODUCTS

ACCESSORY

Item No: CELEXTLKC
Required: No
Description: NHP Panelboard Accessory External Light Kit Time Clock 1 CH Contact 2 NO Contacts 25A

Item No: CELHDSPBE
Required: No
Description: NHP Panelboard Accessory Door Swing Handle E Key

Item No: CELHDSPPP
Required: No
Description: NHP Panelboard Accessory Door Swing Handle Pad Lockable 10mm

Item No: CELHDSPS9
Required: No
Description: NHP Panelboard Accessory Door Swing Handle 92268

Item No: CELHDSPSC
Required: No
Description: NHP Panelboard Accessory Door Swing Handle CI001

Item No: CELHDSPSK
Required: No
Description: NHP Panelboard Accessory Door Swing Handle K144 Key

Item No: CELHDSZNKIT
Required: No
Description: NHP Panelboard Accessory Door Swing Handle IP66 Non Lockable

Item No: DA28400
Required: No
Description: STEGO Pressure Compensation Device Plastic M40 IP66 and X9K Qty 2

Item No: DA28406
Required: No
Description: STEGO Pressure Compensation Device Plastic M12 IP66 and X9K Qty 2

Item No: DD084
Required: No
Description: STEGO Drainage Device Plastic IP66 and IP67 and IP69K M50

Item No: MD6POAEGMS
Required: No
Description: NHP MOD6+ One Panelboard End Plate Assembly 1.6mm Steel Gland

Item No: MD6POAEGPV
Required: No
Description: NHP MOD6+ One Panelboard End Plate Assembly 5.0mm PVC Gland

Item No: MD6POEN24
Required: No
Description: NHP MOD6+ One Panelboard Earth Neutral Kit 24 Way to suit 2m and 3m Enclosure