# MC30SSX

**Steute Non-contact Interlocks Extreme Actuating Magnet Stainless Steel M30 for Safety Sensors**

NON-CONTACT INTERLOCKS

.steute

| | |
|---|---|
| **Component type** | Limit switch |
| **Range** | Non-contact Interlock |
| **Model** | N/A |
| **Product status** | Existing |

Steute safety sensors safeguard sliding, hinged and removable protective doors that are required to be closed to secure operators safety. They can be retro-fitted onto existing equipment and safety sensors are used as an alternative to mechanically operated limit switches. Safe switching is ensured through the encapsulation of contacts, even in the presence of aggressive materials.

| | | |
|---|---|---|
| **ELECTRICAL** | Type of control element | Other |
| | Type of electric connection | None |
| | Rated operation current Ie at AC-15, 230 V | 0 A |
| | Rated operation current Ie at DC-13, 230 V | 0 A |
| | Forced opening | No |
| **COMMUNICATION** | Type of interface | None |
| | Type of interface for safety communication | None |
| **CONSTRUCTION** | Material housing | Metal |
| | Construction type housing | Other |
| | Coating housing | Nickel-plated |
| | Alignment of the control element | Other |
| | Suitable for safety functions | Yes |
| **MECHANICAL** | Switching function latching | No |
| | With status indication | No |
| **DIMENSIONS** | Length of sensor | 16 mm |
| | Diameter sensor | 30 mm |
| **ENVIRONMENT** | Rated temperature | -40…80 °C |
| **CERTIFICATES/APPROVALS** | Explosion safety category for gas | Other |
| | Explosion safety category for dust | Other |





Published on 19 May 2026
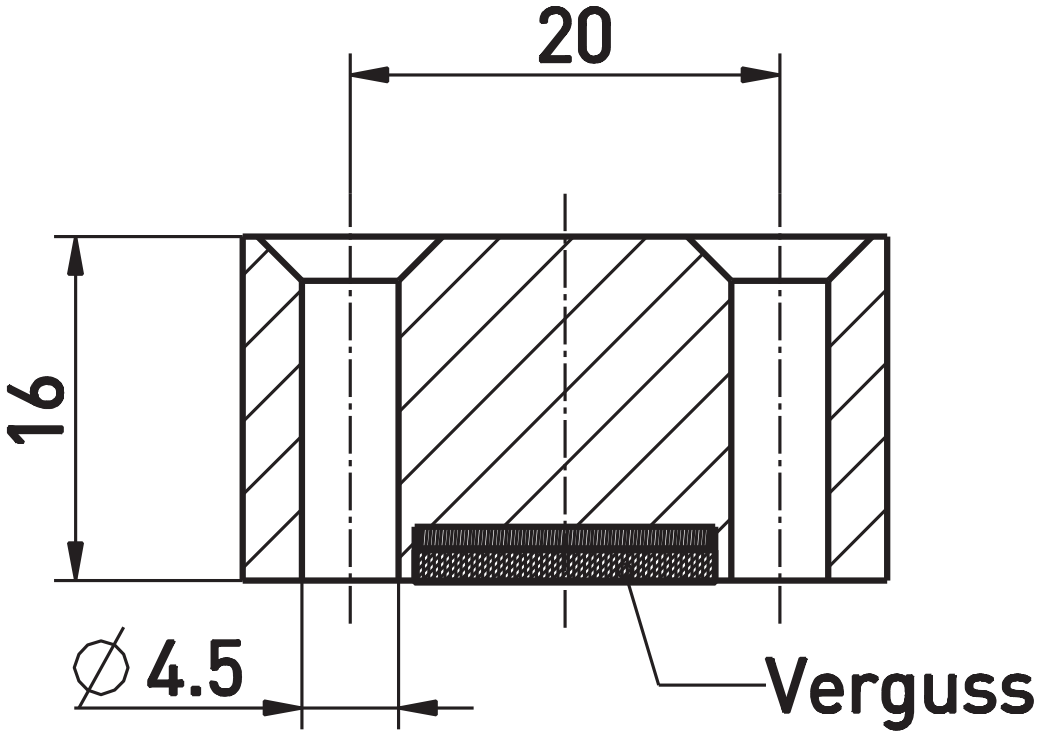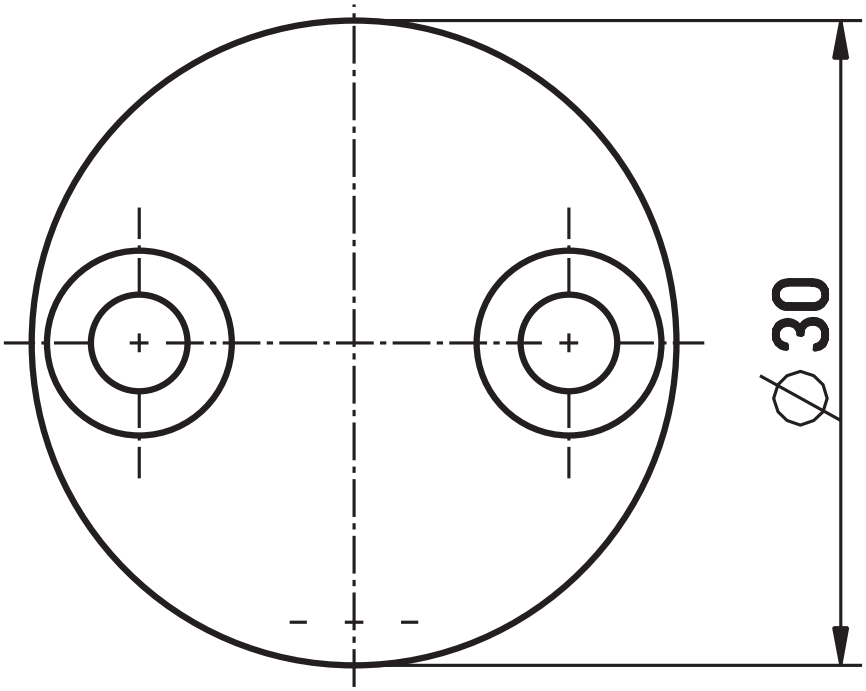
## DIMENSIONAL DIAGRAM