# ISOKC2SW350PG

**NHP ISO Surface Switch - Common Key, Lock in ON/OFF, 3 Pole 50A 500V AC, w/ Base, Grey**

ISO
INDUSTRIAL PLUGS AND SOCKETS

| | |
|---|---|
| **Component type** | Switch disconnector |
| **Range** | ISO |
| **Model** | N/A |
| **Product status** | Existing |

The often overlooked essentials that are always indispensable. Choose from NHP's range of 400+ industrial, isolating and high-current plugs, sockets and switches available for a wide breadth of applications.

| | | |
|---|---|---|
| **ELECTRICAL** | Rated operating voltage Ue | 500 V |
| | Rated uninterrupted current Iu | 50 A |
| | Number of poles | 3 |
| | Frequency | 50 Hz |
| | Rated operation current Ie at AC-23a, 500 V | 50 A |
| | Rated operating voltage | 500 V |
| **CONSTRUCTION** | Material housing | Plastic |
| | Colour control element | Grey |
| | Degree of protection (IP), front side | IP66 |
| | Degree of protection (NEMA) | 4X |
| | Version as reversing switch | No |
| **MECHANICAL** | Padlock locking | Yes |
| **DIMENSIONS** | Height | 101 mm |
| | Width | 101 mm |
| | Depth | 117 mm |
| | Connectable conductor cross section | 10-16 mm² |

# ISOKC2SW350PG

**NHP ISO Surface Switch - Common Key, Lock in ON/OFF, 3 Pole 50A 500V AC, w/ Base, Grey**

ISO
INDUSTRIAL PLUGS AND SOCKETS

## DIMENSIONAL DIAGRAM

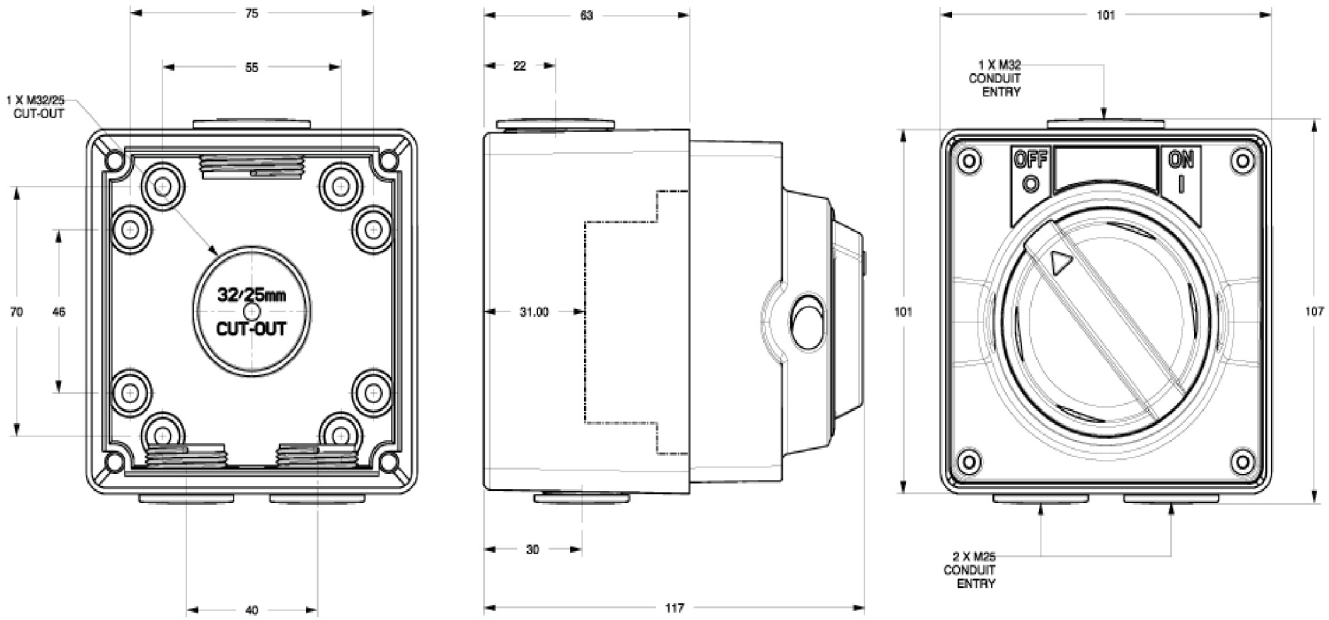


FRONT MOUNTING ENCLOSURE

SIDE COMPLETE

FRONT COMPLETE

All dimensions in mm





Published on 24 July 2026