ISOK2SW320PGLB

NHP ISO Surface Switch - Key, Lock in ON/OFF, 3 Pole 20A 500V AC, w/o Base, Grey

ISO
INDUSTRIAL PLUGS AND SOCKETS

Component type	Switch disconnector
Range	ISO
Model	N/A
Product status	Existing

The often overlooked essentials that are always indispensable. Choose from NHP's range of 400+ industrial, isolating and high-current plugs, sockets and switches available for a wide breadth of applications.

ELECTRICAL	Rated operating voltage Ue	500 V
	Rated uninterrupted current Iu	20 A
	Number of poles	3
	Frequency	50 Hz
	M rating	M150
	Rated operation current Ie at AC-23a, 500 V	20 A
	Rated operating voltage	500 V
CONSTRUCTION	Material housing	Plastic
	Colour control element	Grey
	Degree of protection (IP), front side	IP66
	Degree of protection (NEMA)	4X
	Version as reversing switch	No
MECHANICAL	Padlock locking	Yes
DIMENSIONS	Height	101 mm
	Width	101 mm
	Depth	54 mm
	Connectable conductor cross section	10-16 mm²

Published on 24 July 2026

ISOK2SW320PGLB

NHP ISO Surface Switch - Key, Lock in ON/OFF, 3 Pole 20A 500V AC, w/o Base, Grey

ISO
INDUSTRIAL PLUGS AND SOCKETS

DIMENSIONAL DIAGRAM

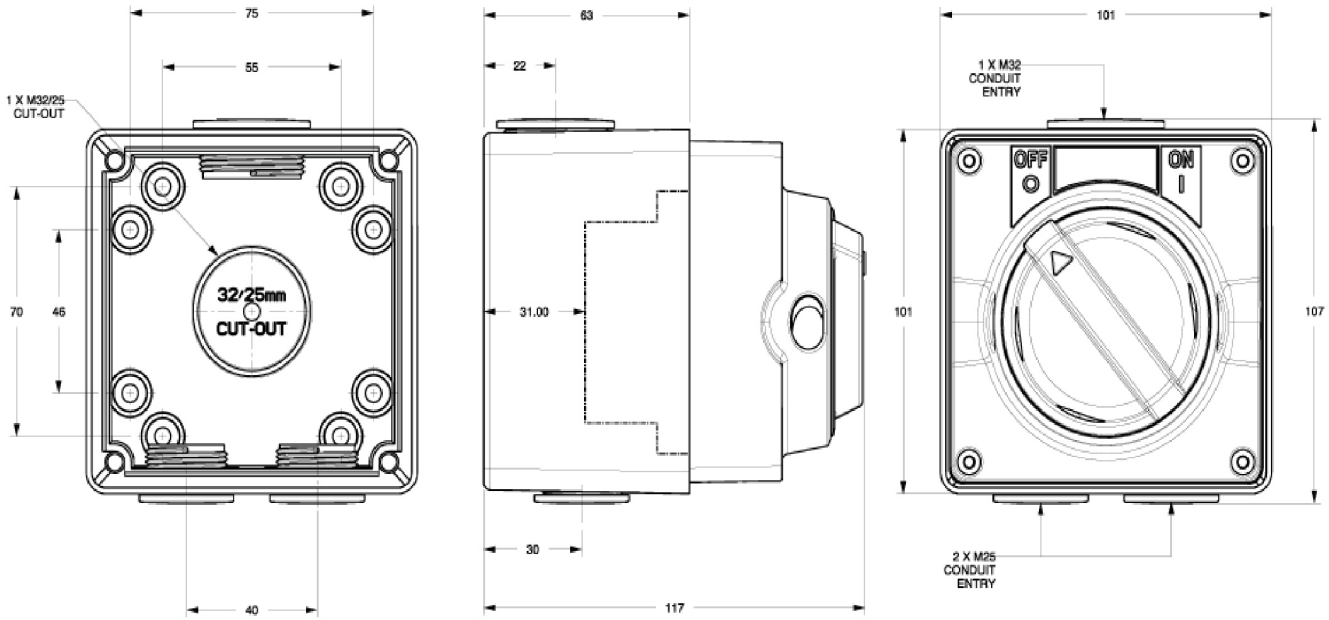

FRONT MOUNTING ENCLOSURE

SIDE COMPLETE

FRONT COMPLETE

All dimensions in mm

Published on 24 July 2026

ISOK2SW320PGLB

NHP ISO Surface Switch - Key, Lock in ON/OFF, 3 Pole 20A 500V AC, w/o Base, Grey

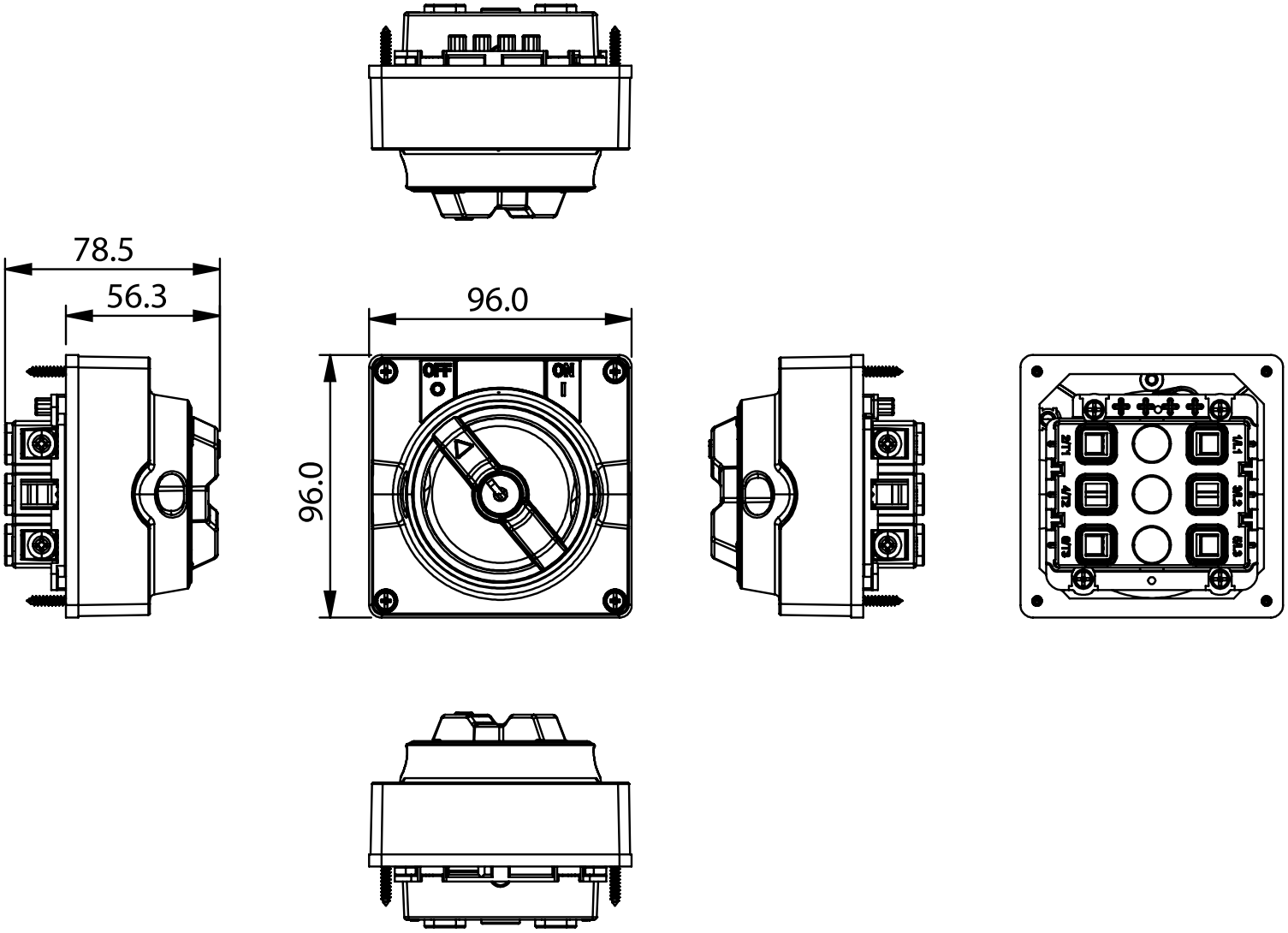

Published on 24 July 2026