ISOK1SW132PGLB

NHP ISO Surface Switch - Key, Lock in OFF, 2 Pole 32A 250V AC, w/o Base, Grey

ISO
INDUSTRIAL PLUGS AND SOCKETS



Component type	Switch disconnector
Range	ISO
Model	N/A
Product status	Existing

The often overlooked essentials that are always indispensable. Choose from NHP's range of 400+ industrial, isolating and high-current plugs, sockets and switches available for a wide breadth of applications.

ELECTRICAL	Rated operating voltage Ue	250 V
	Rated uninterrupted current Iu	32 A
	Number of poles	2
	Frequency	50 Hz
	M rating	M180
	Rated operation current Ie at AC-23a, 250 V	32 A
	Rated operating voltage	250 V
CONSTRUCTION	Material housing	Plastic
	Colour control element	Grey
	Degree of protection (IP), front side	IP66
	Degree of protection (NEMA)	4X
MECHANICAL	Padlock locking	Yes
DIMENSIONS	Height	101 mm
	Width	101 mm
	Depth	54 mm
	Connectable conductor cross section	4-16 mm²

Published on 02 November 2026

ISOK1SW132PGLB

NHP ISO Surface Switch - Key, Lock in OFF, 2 Pole 32A 250V AC, w/o Base, Grey

ISO
INDUSTRIAL PLUGS AND SOCKETS

DIMENSIONAL DIAGRAM

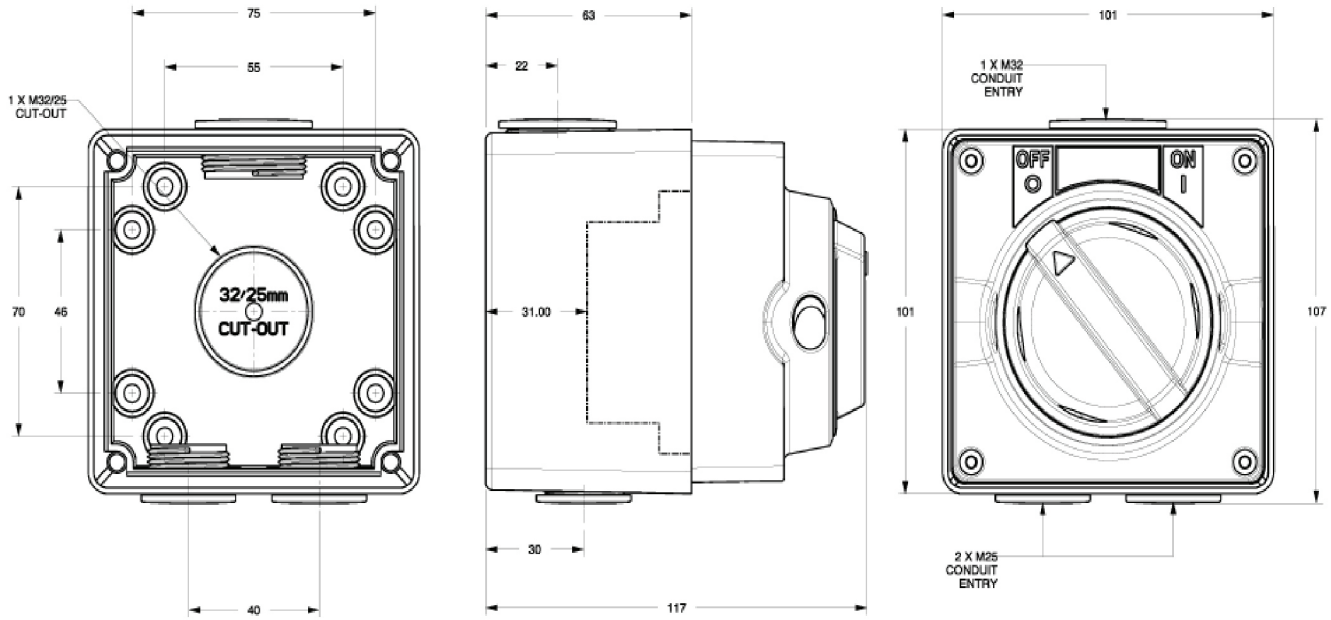

FRONT MOUNTING ENCLOSURE | SIDE COMPLETE | FRONT COMPLETE

All dimensions in mm

Published on 02 November 2026

ISOK1SW132PGLB

NHP ISO Surface Switch - Key, Lock in OFF, 2 Pole 32A 250V AC, w/o Base, Grey

ISO
INDUSTRIAL PLUGS AND SOCKETS

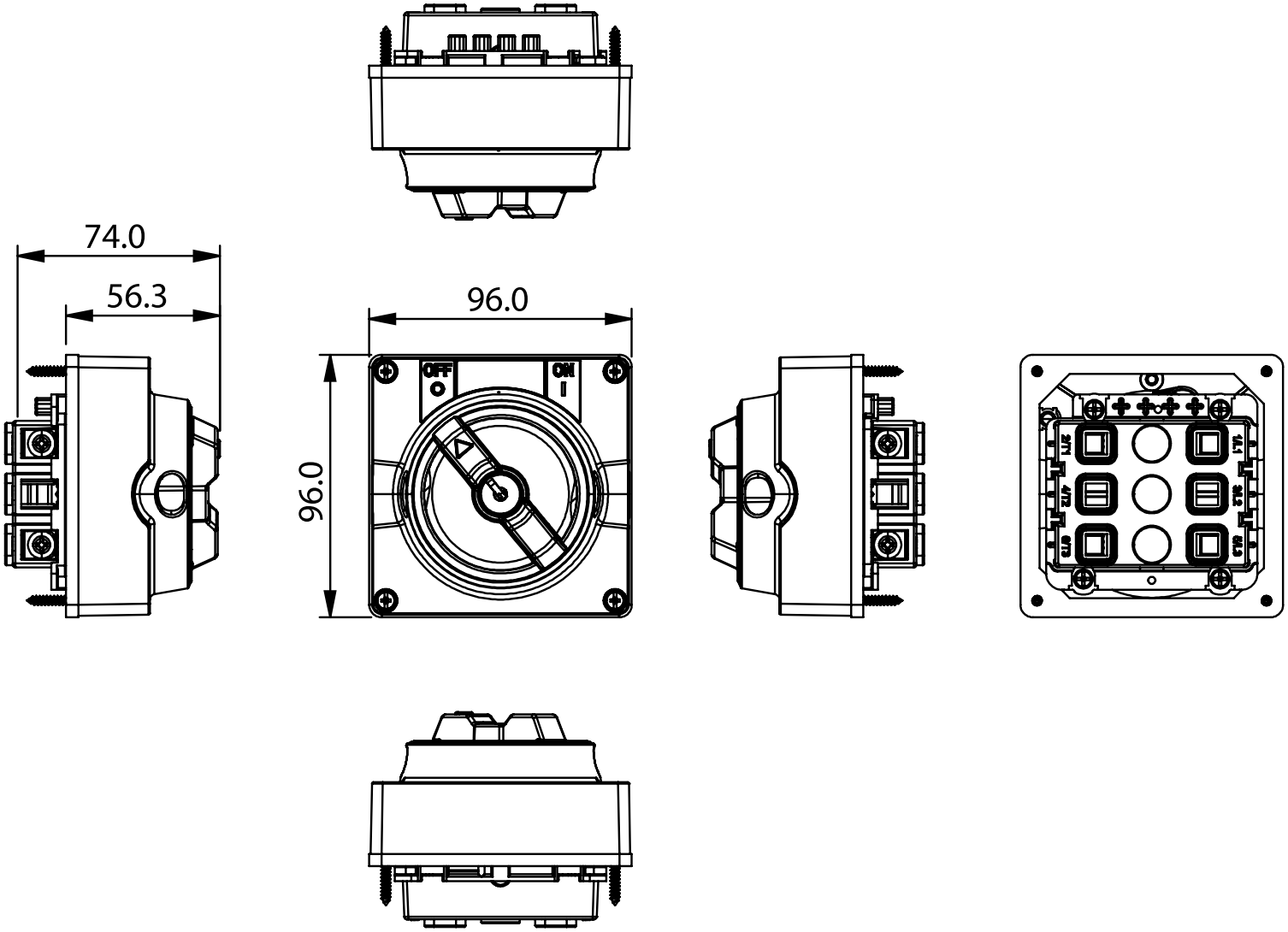

Published on 02 November 2026