ISOEX432P

NHP ISO Extension Socket, 4 Round Pins 32A 500V AC, Electric Orange

ISO
INDUSTRIAL PLUGS AND SOCKETS



Component type	Coupling according to AS/NZS 3123
Range	ISO
Model	N/A
Product status	Existing

The often overlooked essentials that are always indispensable. Choose from NHP's range of 400+ industrial, isolating and high-current plugs, sockets and switches available for a wide breadth of applications.

ELECTRICAL	Rated current	32 A
	Nominal voltage	500 V
	Number of phases	3
	With neutral conductor contact	No
CONSTRUCTION	Material	Plastic
	Colour	Orange
	Type of cover	Hinged lid
	IP rating	IP66
	Number of active pins (round)	4
	Angle of plug	Straight
	Resistant to chemicals	No
DIMENSIONS	Conductor cross section solid (solid, stranded)	6-16 mm²

Published on 29 June 2026

ISOEX432P

NHP ISO Extension Socket, 4 Round Pins 32A 500V AC, Electric Orange

ISO
INDUSTRIAL PLUGS AND SOCKETS

DIMENSIONAL DIAGRAM

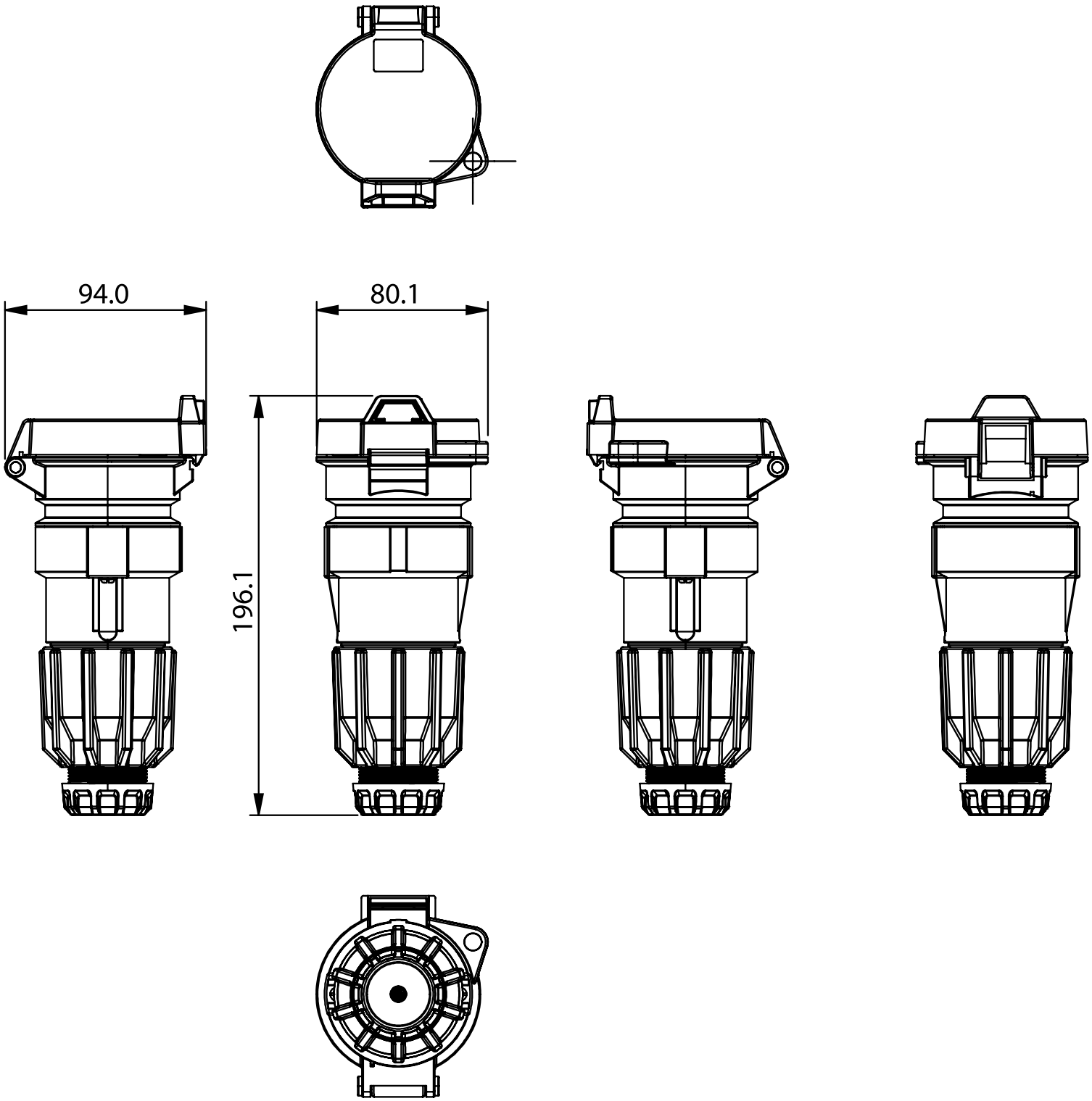

Published on 29 June 2026