ISOC310LRCDPVHRW

NHP ISO Switched Socket Outlet - RCD, 2 Flat Pins + 1 Round Earth 10A 250V AC, w/ Base - Inline, RW

NHP ISO
INDUSTRIAL PLUGS AND SOCKETS



Component type	Socket outlet according to AS/NZS 3112
Range	ISO
Model	N/A
Product status	Existing

The often overlooked essentials that are always indispensable. Choose from NHP's range of 400+ industrial, isolating and high-current plugs, sockets and switches available for a wide breadth of applications.

ELECTRICAL	Nominal voltage	250 V
	Rated current	10 A
	RCD rating	30 mA
	With earth leakage switch	Yes
	M rating	M80
CONSTRUCTION	Material	Polycarbonate (PC)
	Colour	White
	Protective earth pin round	Yes
	Number of active pins (round)	1
	Number of active pins (flat)	2
	With base	Yes
	IP rating	IP66
	Resistant to chemicals	Yes
DIMENSIONS	Base depth	38 mm
	Height	202 mm
	Width	101 mm
	Depth	91 mm

Published on 29 June 2026

ISOC310LRCDPVHRW

NHP ISO Switched Socket Outlet - RCD, 2 Flat Pins + 1 Round Earth 10A 250V AC, w/ Base - Inline, RW

NHP ISO
INDUSTRIAL PLUGS AND SOCKETS

DIMENSIONAL DIAGRAM

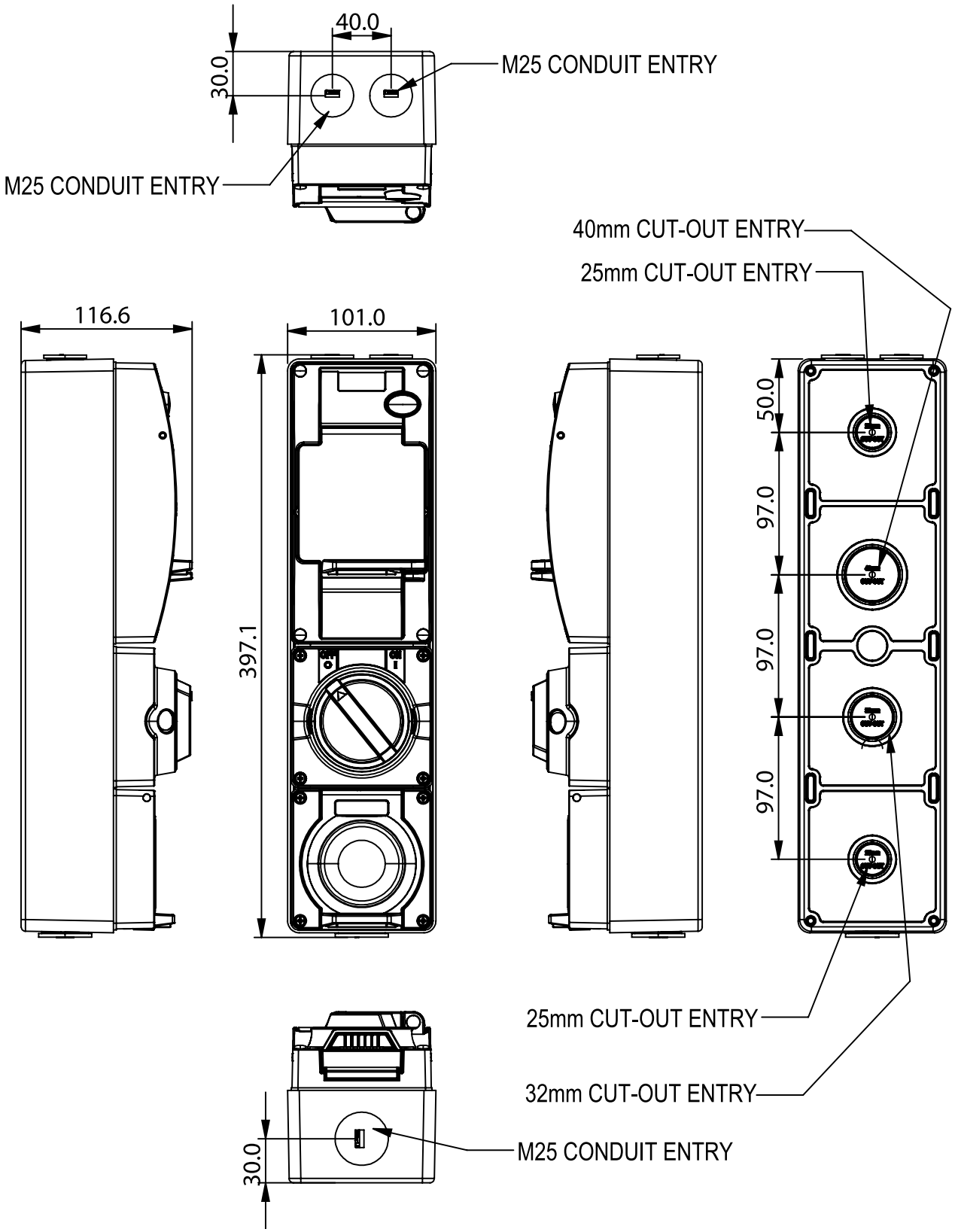

Published on 29 June 2026