ISOBKS1

NHP ISO Pendent Bracket, Stainless Steel, suits ISOPS/ISOPA/ ISOEX 10 - 20A Flat Pins

ISO
INDUSTRIAL PLUGS AND SOCKETS



Component type	Accessories/spare parts for CEE plugs and sockets
Range	ISO
Model	N/A
Product status	Existing

The often overlooked essentials that are always indispensable. Choose from NHP's range of 400+ industrial, isolating and high-current plugs, sockets and switches available for a wide breadth of applications.

CONSTRUCTION

Identification colour	Other
Model	Other
Type of accessory/spare part	Other

Published on 11 November 2026

ISOBKS1

NHP ISO Pendent Bracket, Stainless Steel, suits ISOPS/ISOPA/ ISOEX 10 - 20A Flat Pins

ISO
INDUSTRIAL PLUGS AND SOCKETS

DIMENSIONAL DIAGRAM

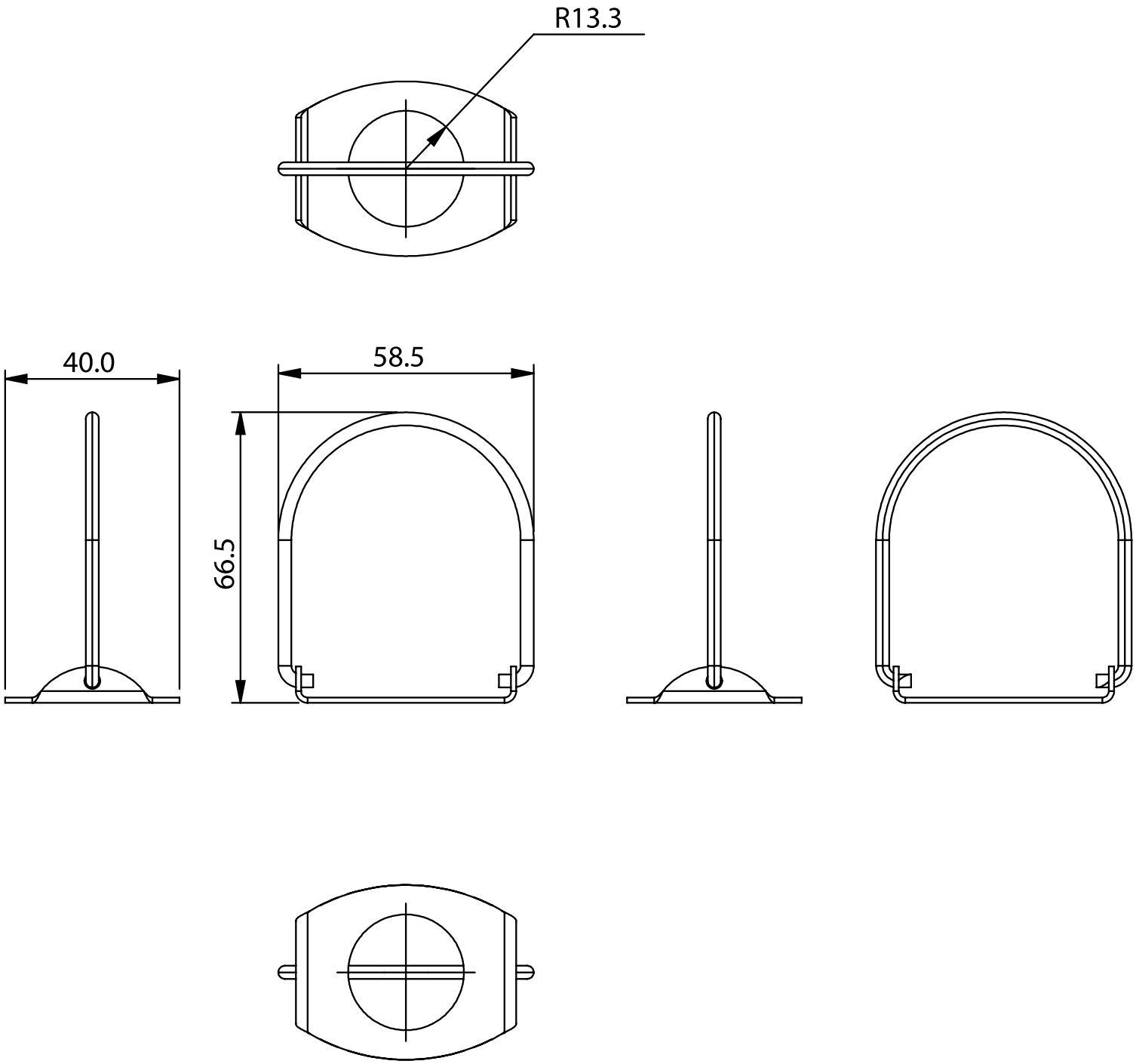

Published on 11 November 2026