IMAX20

Carlo Gavazzi Monitoring Relay 1 Phase OI 2 to 20A AC 2 Wire Self Power NPN PNP Normally Open Output

MONITORING RELAYS



Component type	Current monitoring relay
Range	V/I/PH/PF Monitoring
Model	N/A
Alternative	CALL FOR ALTERNATIVE

The Carlo Gavazzi range of monitoring relays are designed for the detection of phase loss and incorrect phase sequence to over/under current and voltage. Suitable for use in a wide range of applications that require protection against people, fire, earth current leakage, or incorrect mains or cable connections. Installation is easy with front dials and DIP switches.

ELECTRICAL	Current measuring range	2-20 A
	Single-phase over current possible	Yes
	Rated frequency	45400 Hz
	Number of contacts as normally open contact	1
	Rated operation current Ie	0.1 A
	Rated operation current Ie at DC-12, 24 V	5 A
	Rated operation current Ie at DC-13, 24 V	2.5 A
	Voltage type for actuating	Self powered
CONSTRUCTION	Material contact	Other
	Suitable for DIN rail mounting	Yes
	IP rating	IP20
DIMENSIONS	Height	81 mm
	Width	17.5 mm
	Depth	67.2 mm
	Weight	0.08 kg
ENVIRONMENT	Storage temperature	-30…80 °C

Published on 22 May 2026

IMAX20

Carlo Gavazzi Monitoring Relay 1 Phase OI 2 to 20A AC 2 Wire Self Power NPN PNP Normally Open Output

MONITORING RELAYS

DIMENSIONAL DIAGRAM

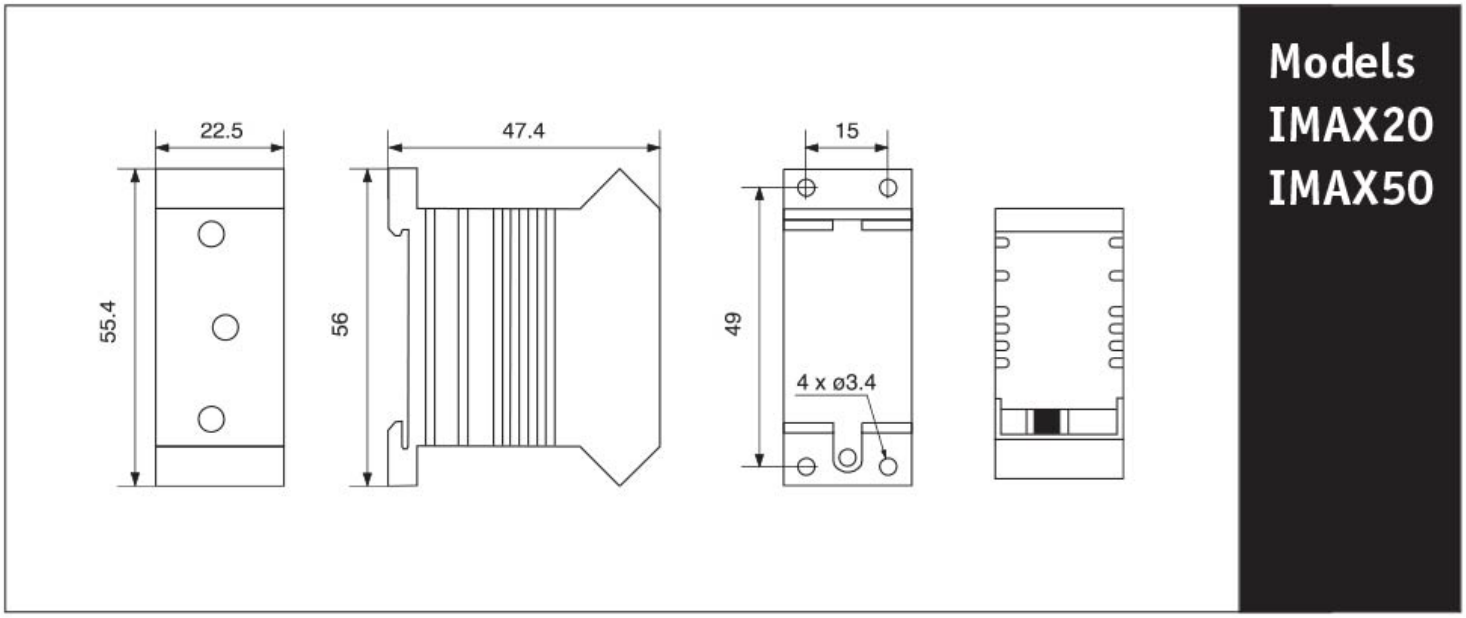

Published on 22 May 2026