GSV2000203

Cosmotec Kryos Filter Fan H204 x W204 x D98mm 115V AC 108m3 per Hour



Component type	Ventilator (enclosure/cabinet)
Range	GSV
Model	N/A
Product status	Existing

The Cosmotec Kryos filter fans provide a simple, economical and reliable way to ventilate electrical enclosures. They are available in a range of sizes, airflows and operating voltage and each fan is easily reversible for either inlet or exhaust applications. Minimising the risk of installation errors and saving commissioning time.

ELECTRICAL	Voltage type	AC
	Operating voltage at AC 60 Hz	115 V
	Operating voltage at AC 50 Hz	115 V
CONSTRUCTION	With filter	Yes
	IP rating	IP54
	Mounting method	Snap mounting
MECHANICAL	Fan flow (unimpeded)	108 m³/h
AUDIBILITY	Noise emission	49 dB(A)
DIMENSIONS	Width	204 mm
	Height	204 mm
	Depth	98 mm
	Height opening	177 mm
	Width opening	177 mm

Published on 07 September 2026

GSV2000203

Cosmotec Kryos Filter Fan H204 x W204 x D98mm 115V AC 108m3 per Hour

DIMENSIONAL DIAGRAM

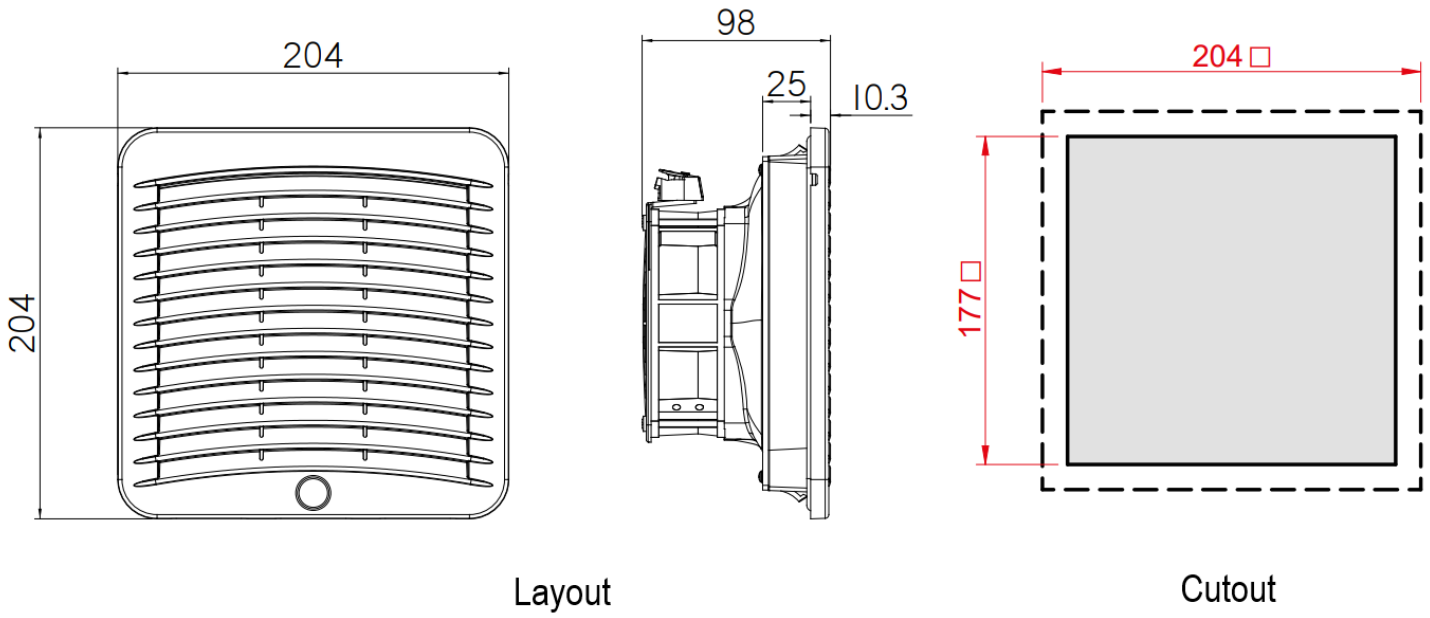

Layout

Cutout

Published on 07 September 2026