GH15STML110V

Ghisalba Contactor Latching 132kW 3Pole 110VAC and VDC Close Release

NHP ELECTRICAL ENGINEERING PRODUCTS

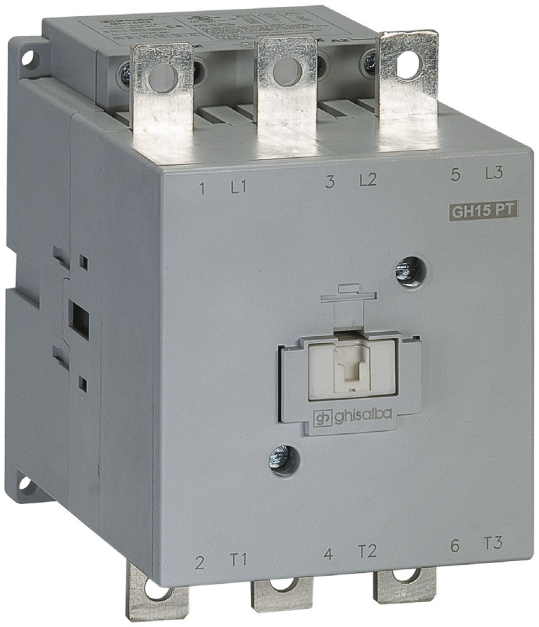

Component type	Power contactor, AC switching
Range	Contactors
Model	N/A
Product status	Existing

Ghisalba's range of contactor families are available in a wide variety of contactor sizes, offering both economy and choice. Specialising in 3 and 4 pole contactors, with ranges from 4kW up to 710kW at 415V AC and 280kW up to 500kW at 1000V AC and additional DC switching contactors for up to 1000V DC.

ELECTRICAL	**Number of normally open contacts as main contact**	3
	Number of normally closed contacts as main contact	0
	Rated operation current Ie at AC-3, 400 V	260 A
	Rated operation power at AC-3, 400 V	132 kW
	Rated operation current Ie at AC-1, 400 V	450 A
	Max. rated operation voltage Ue AC	1000 V
	Voltage type for actuating	AC/DC
	Rated control supply voltage Us at AC 50HZ	110-120 V
	Control supply voltage Us at DC	110 V
	Number of auxiliary contacts as normally open contact	0
	Number of auxiliary contacts as normally closed contact	0
	Rated operation current Ie at AC-3, 1000 V	100 A
	Rated control supply voltage Us at AC 60HZ	110-120 V
	Type of electrical connection of main circuit	Bolt connection
CONSTRUCTION	**IP rating**	IP00
	Mounting method	Screw mounting
DIMENSIONS	**Height**	200 mm
	Width	145 mm
	Depth	208 mm
	Weight	7.5 kg

Published on 30 May 2026

GH15STML110V

Ghisalba Contactor Latching 132kW 3Pole 110VAC and VDC Close Release

ELECTRICAL ENGINEERING PRODUCTS

DIMENSIONAL DIAGRAM

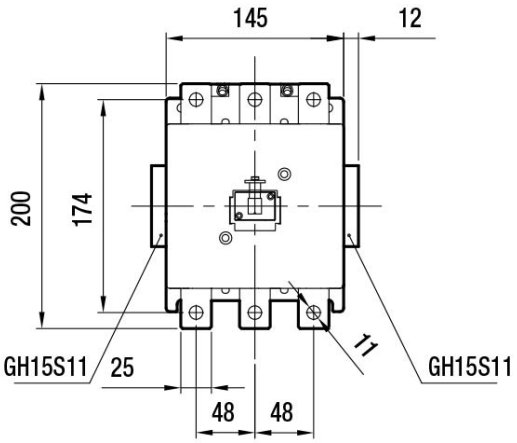

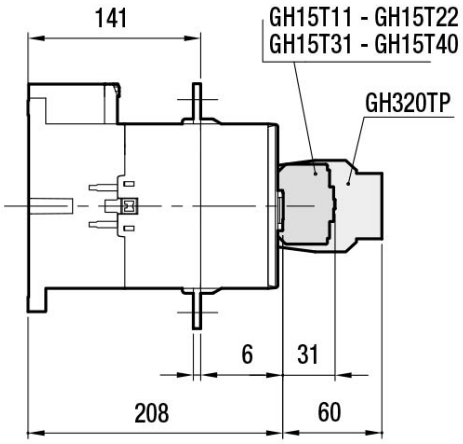

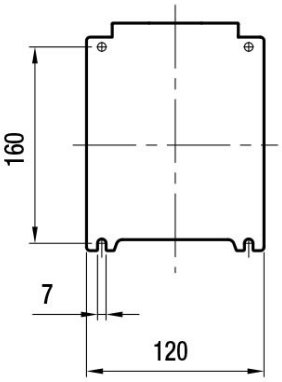

Published on 30 May 2026