EEXES98H11

Steute HAE Limit Switch Ex 1,2,21,22 Roller Lever 1NO 1NC Contact

LIMIT SWITCHES

.steute



Component type	Limit switch
Range	HAE Limit Switch
Model	N/A
Product status	Existing

Steute Technologies offer a wide range of explosion-proof HAE position limit switches for industrial applications, with optional safety functions. Explosion-proof limit switches are offered with thermoplastic or metal enclosures with slow or snap action. Ideal for use in areas with hazardous gas, vapours, mists, hazardous powder, dust or in extreme cold (down to -60°C).

ELECTRICAL	**Rated operation current Ie at AC-15, 230 V**	0 A
	Rated operation current Ie at DC-13, 230 V	0.25 A
CONSTRUCTION	**Material housing**	Metal
	Coating housing	Powder coating

Published on 15 July 2026

EEXES98H11

Steute HAE Limit Switch Ex 1,2,21,22 Roller Lever 1NO 1NC Contact

LIMIT SWITCHES

.steute

DIMENSIONAL DIAGRAM

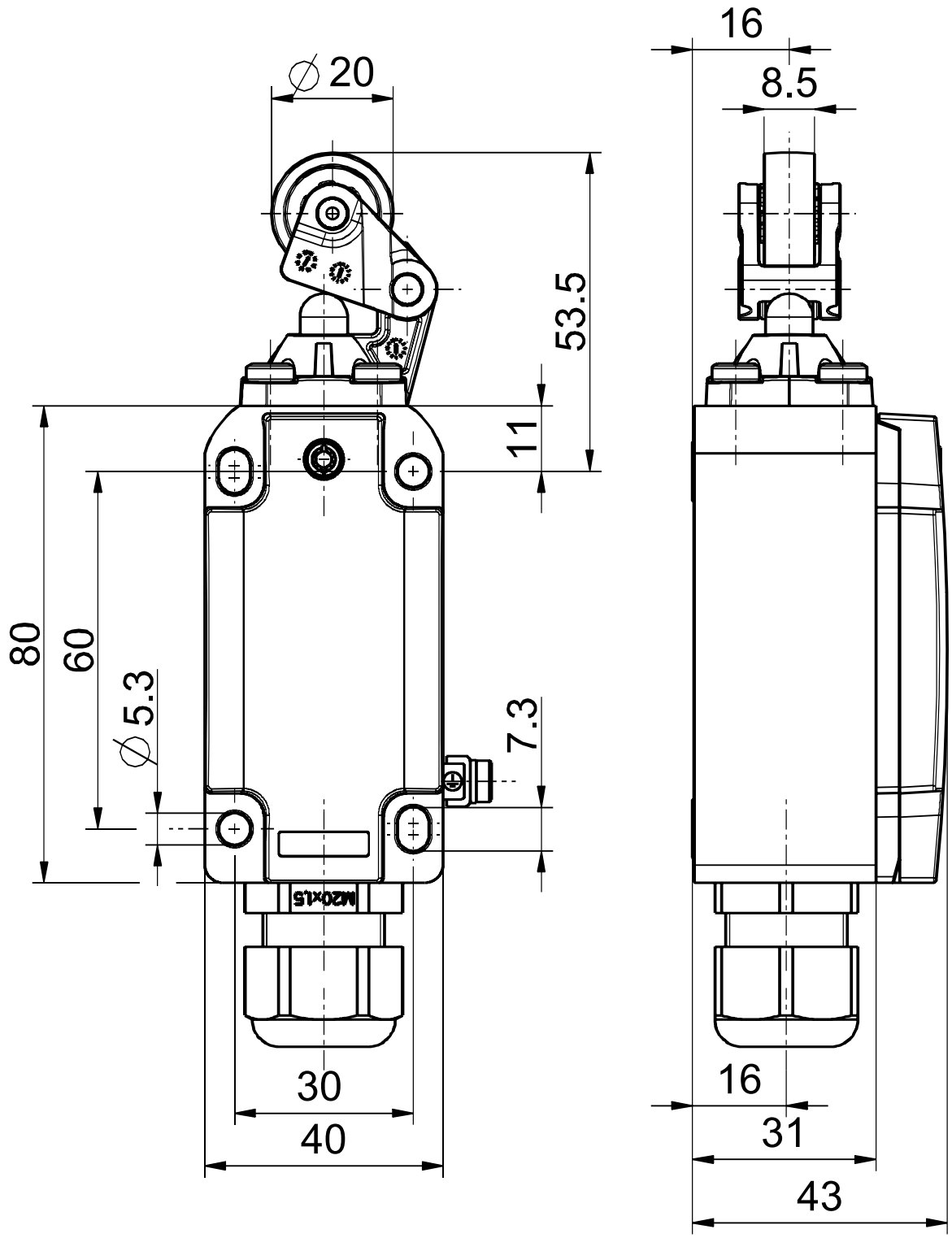

Published on 15 July 2026