ECOSPITFIRE

Stanilite Single Point Economy Emergency Spitfire Recessed with Flex and Plug with LIFEPO4 Battery



Component type	Emergency luminaire
Range	Single Point Economy Emergency Spitfire
Model	N/A
Product status	Existing

The Stanilite single point economy Spitfire range features larger terminals for faster installation, efficient lithium power and is retrofittable to previous Spitfire installations.

ELECTRICAL	Operating mode	Non-maintained
	Nominal voltage	240 V
	Voltage type	AC
	Max. system power	1 W
	Nominal operation time	100000 h
CONSTRUCTION	With remote switch connection	No
	With remote control	No
	Mounting method	Recessed
	With pictogram	No
	With light source	Yes
	Material housing	Polycarbonate (PC)
	Colour housing	White
	IP rating	IP20
PHOTOMETRIC	Lamp type	LED not exchangeable
	Photometric classification (C0)	D40
	Photometric classification	D40
DIMENSIONS	Width	85 mm
	Length	85 mm
	Outer diameter	94 mm
ENVIRONMENT	Rated ambient temperature according to IEC62722-2-1	0…40 °C
CERTIFICATES/APPROVALS	Compliant to AS/NZS CISPR 15	Yes
	Compliant to AS/NZS 2293.3:2018	Yes
	Compliant to AS/NZS 60598.1:2017	Yes
	Compliant to AS/NZS 60598.2.22:2005	Yes

Published on 23 September 2026

ECOSPITFIRE

Stanilite Single Point Economy Emergency Spitfire Recessed with Flex and Plug with LIFEPO4 Battery

DIMENSIONAL DIAGRAM

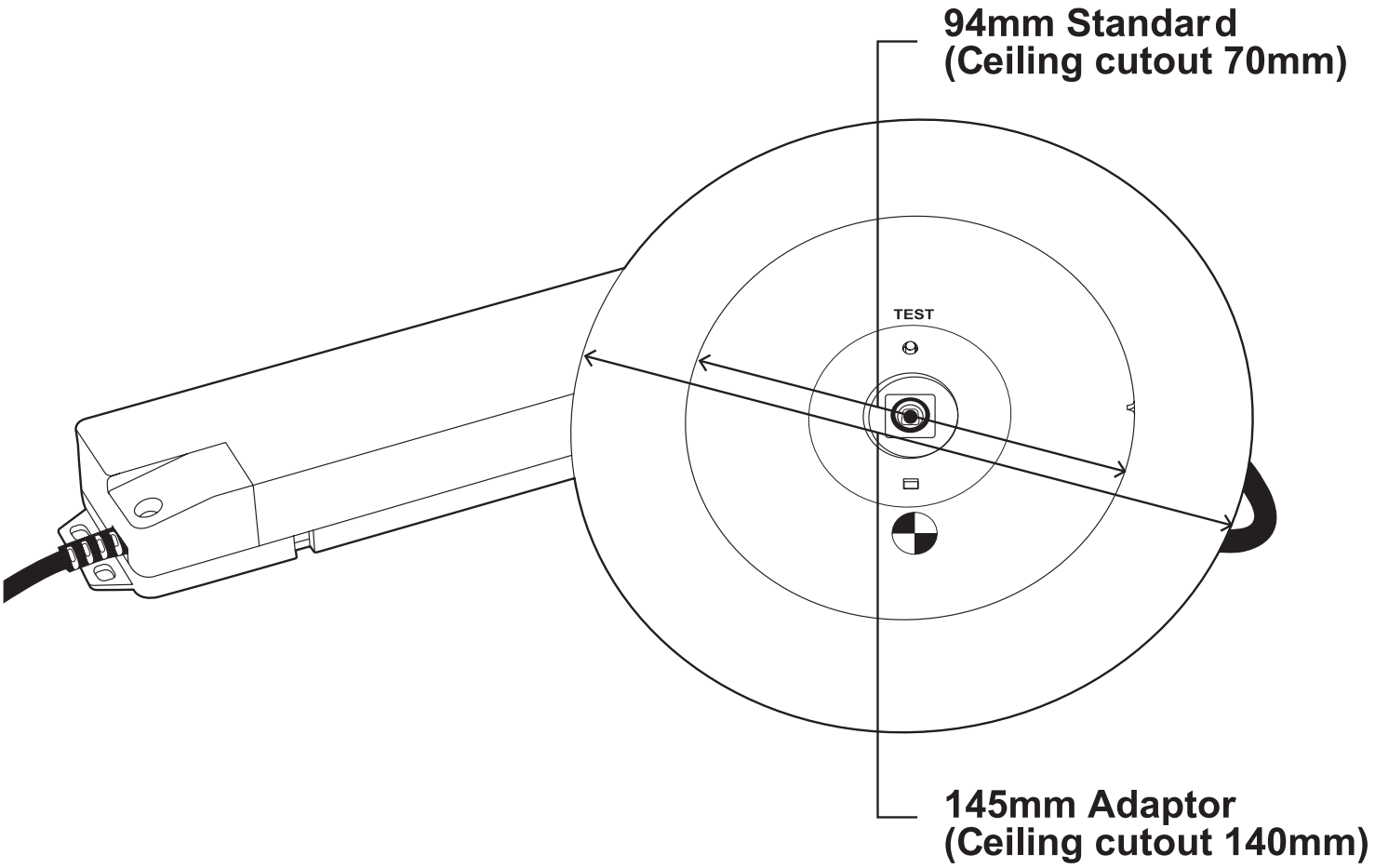

RELATED PRODUCTS

ACCESSORY



Item No: 0301226

Required: No

Description: Stanilite Emergency Battery Pack Lifepo4 6.4V 1.5Ah Ecospitfire

Published on 23 September 2026