DPA01DM48

Carlo Gavazzi Monitoring Relay 3 Phase Sequence and Phase Loss 380 to 415V AC Supply 1 CO

MONITORING RELAYS



Component type	Phase monitoring relay
Range	V/I/PH/PF Monitoring
Model	N/A
Product status	Discontinued

The Carlo Gavazzi range of monitoring relays are designed for the detection of phase loss and incorrect phase sequence to over/under current and voltage. Suitable for use in a wide range of applications that require protection against people, fire, earth current leakage, or incorrect mains or cable connections. Installation is easy with front dials and DIP switches.

ELECTRICAL	Rated operating voltage Ue	380-415 V
	Rated frequency	50-60 Hz
	Phase failure detection	Yes
	Phase sequence monitoring	Yes
	Number of contacts as change-over contact	2
	Rated operation current Ie	8 A
	Rated operation current Ie at AC-15, 230 V	2.5 A
	Rated operation current Ie at DC-12, 24 V	5 A
	Rated operation current Ie at DC-13, 24 V	2.5 A
	Voltage type for actuating	Self powered
	Over voltage category	III
	Type of electric connection	Screw connection
CONSTRUCTION	Material contact	Silver tin-oxide
	Suitable for DIN rail mounting	Yes
	IP rating	IP20
DIMENSIONS	Height	83.5 mm
	Width	22.5 mm
	Depth	99.5 mm
ENVIRONMENT	Storage temperature	-30…80 °C

Published on 16 November 2026

DPA01DM48

Carlo Gavazzi Monitoring Relay 3 Phase Sequence and Phase Loss 380 to 415V AC Supply 1 CO

MONITORING RELAYS

DIMENSIONAL DIAGRAM

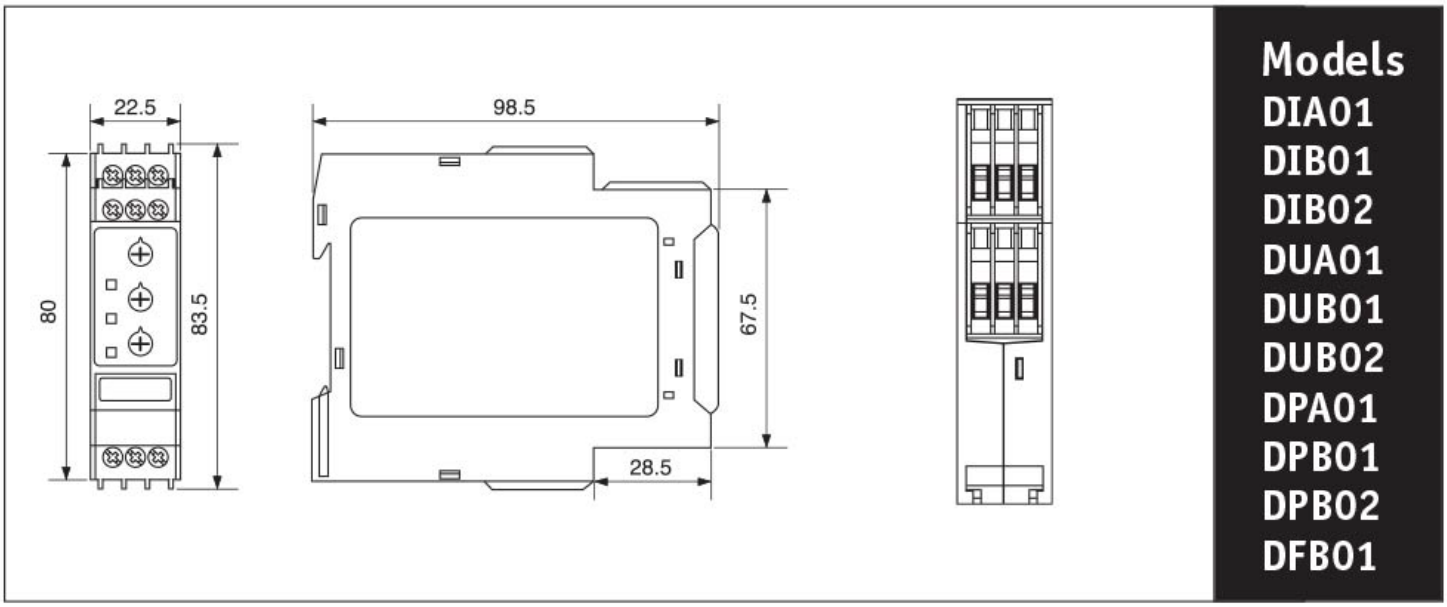

Published on 16 November 2026