DPA01CM44

Carlo Gavazzi Monitoring Relay 3 Phase Sequence and Phase Loss 208 to 480V AC Supply 1 CO

MONITORING RELAYS



Component type	Phase monitoring relay
Range	V/I/PH/PF Monitoring
Model	N/A
Product status	Discontinued

The Carlo Gavazzi range of monitoring relays are designed for the detection of phase loss and incorrect phase sequence to over/under current and voltage. Suitable for use in a wide range of applications that require protection against people, fire, earth current leakage, or incorrect mains or cable connections. Installation is easy with front dials and DIP switches.

ELECTRICAL	**Rated operating voltage Ue**	208-480 V
	Rated frequency	50-60 Hz
	Phase failure detection	Yes
	Phase sequence monitoring	Yes
	Number of contacts as change-over contact	1
	Rated operation current Ie	8 A
	Rated operation current Ie at AC-15, 230 V	2.5 A
	Rated operation current Ie at DC-12, 24 V	5 A
	Rated operation current Ie at DC-13, 24 V	2.5 A
	Voltage type for actuating	Self powered
	Over voltage category	III
	Type of electric connection	Screw connection
CONSTRUCTION	**Material contact**	Silver tin-oxide
	Suitable for DIN rail mounting	Yes
	IP rating	IP20
DIMENSIONS	**Height**	83.5 mm
	Width	22.5 mm
	Depth	99.5 mm
ENVIRONMENT	**Storage temperature**	-30…80 °C

Published on 03 November 2026

DPA01CM44

Carlo Gavazzi Monitoring Relay 3 Phase Sequence and Phase Loss 208 to 480V AC Supply 1 CO

MONITORING RELAYS

DIMENSIONAL DIAGRAM

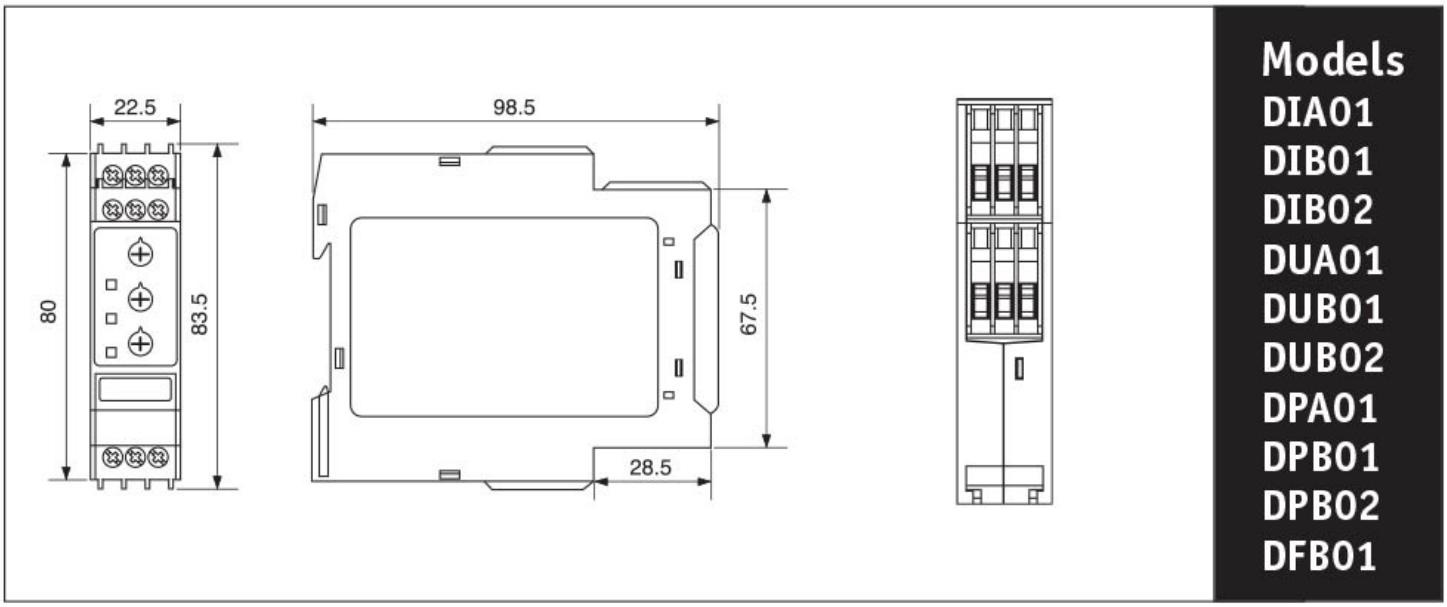

Published on 03 November 2026