DIB01CD48500MA

Carlo Gavazzi Monitoring Relay Over/Under Current via Int-Shnt 10-500mA ACDC and 24-48V ACDC 1CO

MONITORING RELAYS



Component type	Current monitoring relay
Range	V/I/PH/PF Monitoring
Model	N/A
Alternative	705102402032

The Carlo Gavazzi range of monitoring relays are designed for the detection of phase loss and incorrect phase sequence to over/under current and voltage. Suitable for use in a wide range of applications that require protection against people, fire, earth current leakage, or incorrect mains or cable connections. Installation is easy with front dials and DIP switches.

ELECTRICAL	Current measuring range	0.01-0.5 A
	Single-phase under current possible	Yes
	Single-phase over current possible	Yes
	Rated frequency	45-65 Hz
	Contains function DC-voltage under current	Yes
	Contains function DC-voltage over current	Yes
	Number of contacts as change-over contact	1
	Rated operation current Ie	8 A
	Rated operation current Ie at AC-15, 230 V	2.5 A
	Rated operation current Ie at DC-12, 24 V	5 A
	Rated operation current Ie at DC-13, 24 V	2.5 A
	Voltage type for actuating	AC/DC
	Rated control supply voltage Us at AC 50HZ	24-48 V
	Rated control supply voltage Us at DC	24-48 V
	Rated control supply voltage Us at AC 60HZ	24-48 V
	Over voltage category	III
	Type of electric connection	Screw connection
	Min. adjustable delay-on energization time	1 s
	Max. permitted delay-on energization time	6 s
CONSTRUCTION	Material contact	Silver tin-oxide
	Suitable for DIN rail mounting	Yes
	IP rating	IP20
DIMENSIONS	Height	83.5 mm
	Width	22.5 mm
	Depth	99.5 mm

Published on 12 May 2026

DIB01CD48500MA

Carlo Gavazzi Monitoring Relay Over/Under Current via Int-Shnt 10-500mA ACDC and 24-48V ACDC 1CO

MONITORING RELAYS

DIMENSIONS	Weight	0.15 kg
ENVIRONMENT	Storage temperature	-30…80 °C

DIMENSIONAL DIAGRAM

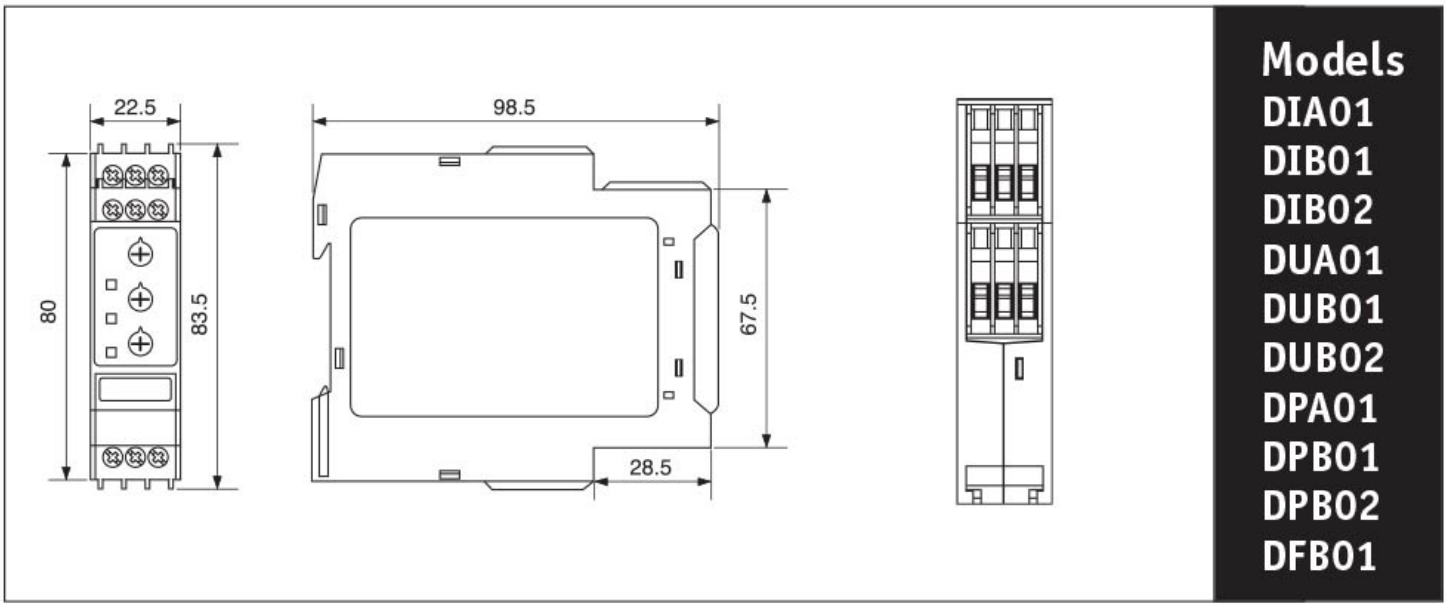

Published on 12 May 2026