# DIB01CB235A

**Carlo Gavazzi Monitoring Relay Over/Under Current via Int-Shnt 0.1-5A ACDC and 115-230VAC 1CO**

MONITORING RELAYS




| | |
|---|---|
| **Component type** | Current monitoring relay |
| **Range** | V/I/PH/PF Monitoring |
| **Model** | N/A |
| **Product status** | Discontinued |

The Carlo Gavazzi range of monitoring relays are designed for the detection of phase loss and incorrect phase sequence to over/under current and voltage. Suitable for use in a wide range of applications that require protection against people, fire, earth current leakage, or incorrect mains or cable connections. Installation is easy with front dials and DIP switches.

| | | |
|---|---|---|
| **ELECTRICAL** | Current measuring range | 0.1-5 A |
| | External current transformer | Yes |
| | Single-phase under current possible | Yes |
| | Single-phase over current possible | Yes |
| | Rated frequency | 45-65 Hz |
| | Contains function DC-voltage under current | Yes |
| | Contains function DC-voltage over current | Yes |
| | Number of contacts as change-over contact | 1 |
| | Rated operation current Ie | 8 A |
| | Rated operation current Ie at AC-15, 230 V | 2.5 A |
| | Rated operation current Ie at DC-12, 24 V | 5 A |
| | Rated operation current Ie at DC-13, 24 V | 2.5 A |
| | Voltage type for actuating | AC |
| | Control supply voltage AC, 2nd input | 115 V |
| | Control supply voltage Us at AC 50HZ | 230 V |
| | Over voltage category | III |
| | Type of electric connection | Screw connection |
| | Min. adjustable delay-on energization time | 1 s |
| | Max. permitted delay-on energization time | 6 s |
| **CONSTRUCTION** | Material contact | Silver tin-oxide |
| | Suitable for DIN rail mounting | Yes |
| | IP rating | IP20 |
| **DIMENSIONS** | Height | 83.5 mm |
| | Width | 22.5 mm |
| | Depth | 99.5 mm |



Published on 22 May 2026

# DIB01CB235A

**Carlo Gavazzi Monitoring Relay Over/Under Current via Int-Shnt 0.1-5A ACDC and 115-230VAC 1CO**

MONITORING RELAYS

| | | |
|---|---|---|
| **DIMENSIONS** | Weight | 0.15 kg |
| **ENVIRONMENT** | Storage temperature | -30…80 °C |

## DIMENSIONAL DIAGRAM

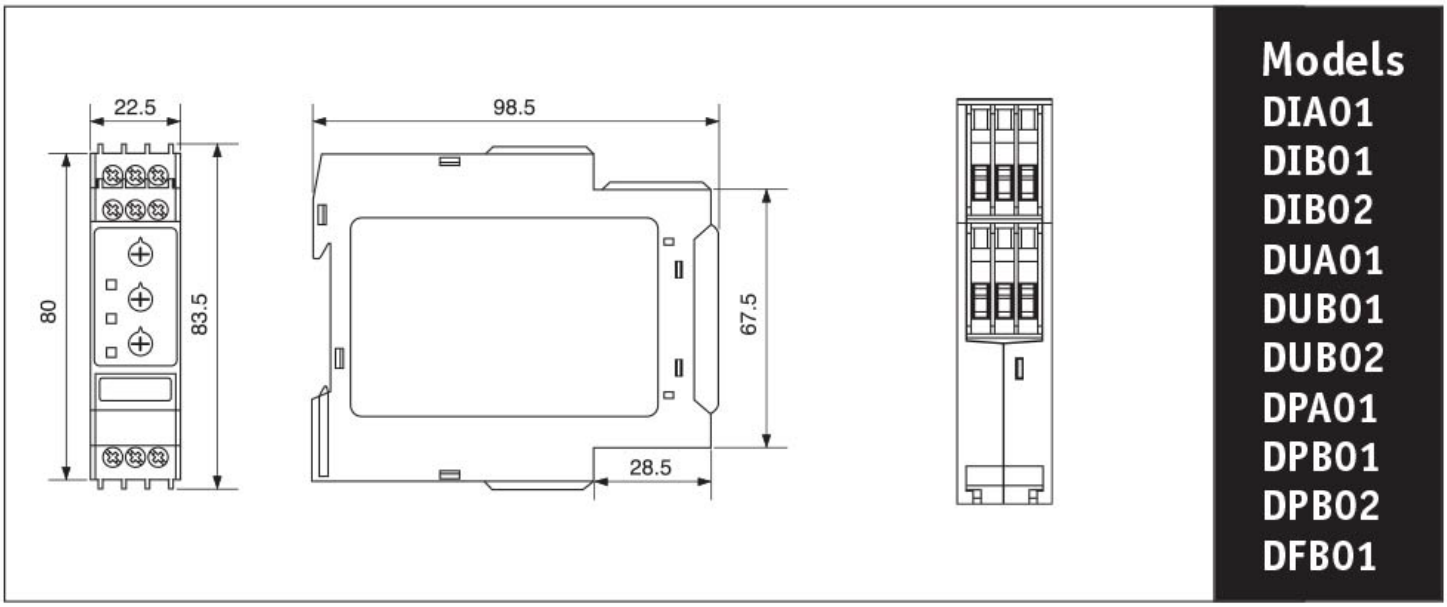




Published on 22 May 2026