CPLACC48G

NHP Concept Plus Panelboard Accessory Module 432mm IP42 DIN 48 Way with Cutout Escutcheon Grey

Component type	Empty cabinet
Range	Concept Plus
Model	N/A
Product status	Existing

The Concept Plus Panelboard is a multipurpose panelboard for general purpose applications, offering a large range of features and options. Concept Plus offers an IP42 rating with optional IP52.

CONSTRUCTION	**Material housing**	Steel
	Surface protection	Powder coating
	Colour	Storm grey
	Mounting method	Surface mounted (plaster)
	Material escutcheon	Mild steel
	Material plate thickness cabinet	1.6 mm
	Material plate thickness door/cover	1.6 mm
	Type of handle	Semi-flush
	Thickness of inner plate/escutcheon	1
	IP rating	IP42
	Type of cover	Door
	Type of door	Single
	Transparent cover/door	No
	With lock	Yes
	Number of rows	2
MECHANICAL	**Number of modules**	2
	Escutcheon	Yes
	Impact strength	IK10
DIMENSIONS	**Height**	432 mm
	Width	600 mm
	Depth	200 mm
ENVIRONMENT	**Suitable for outdoor use**	No

CPLACC48G

NHP Concept Plus Panelboard Accessory Module 432mm IP42 DIN 48 Way with Cutout Escutcheon Grey

DIMENSIONAL DIAGRAM

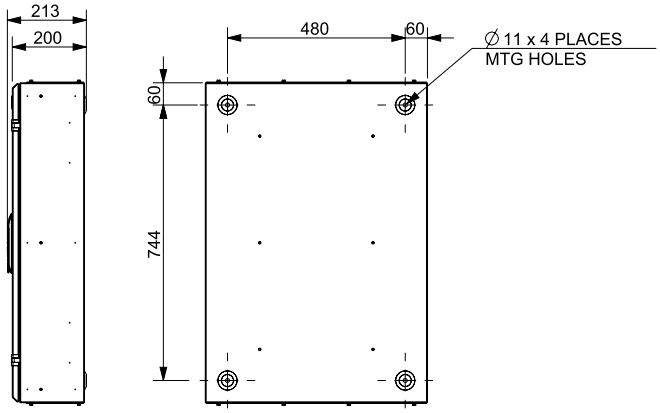

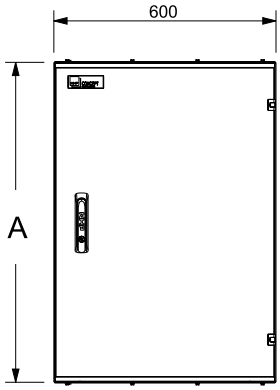

Module Size	A	B
2	432mm	312mm
3	648mm	528mm
4	864mm	744mm
5	1080mm	960mm
6	1296mm	1176mm
7	1512mm	1392mm
8	1728mm	1608mm
9	1944mm	1824mm

Plan view

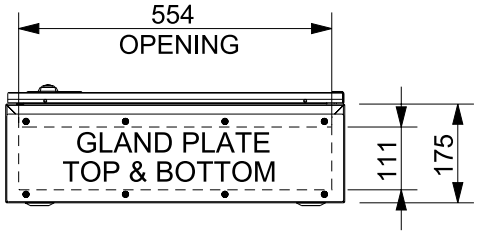

RELATED PRODUCTS

ACCESSORY

Item No: CELAMMS
Required: No
Description: NHP Panelboard Accessory Support Mullion

Item No: CELEN24
Required: No
Description: NHP Panelboard Accessory Earth Neutral Kit 24 Way

Item No: CELEN24D
Required: No
Description: NHP Panelboard Accessory Earth Neutral Bar Kit 24 Way Dual Bar Odd and Even

Item No: CPLASBAL2
Required: No
Description: NHP Panelboard Accessory CEL Panelboard Support Segreg Barrier 2mm Aluminium 600x200mm

Item No: DA28400
Required: No
Description: STEGO Pressure Compensation Device Plastic M40 IP66 and X9K Qty 2

Item No: DA28404000
Required: No
Description: STEGO Pressure Compensation Device Aluminium M12 IP67 Qty 1

RELATED PRODUCTS

ACCESSORY

Item No: DA28406

Required: No

Description: STEGO Pressure Compensation Device Plastic M12 IP66 and X9K Qty 2

Item No: DA28420000

Required: No

Description: STEGO Pressure Compensation Device Plastic M40 IP66 Qty 1

Item No: DA28455

Required: No

Description: STEGO Pressure Compensation Device 303 Stainless M40 IP66 and X9K

Item No: DD084

Required: No

Description: STEGO Drainage Device Plastic IP66 and IP67 and IP69K M50