COE48LG

NHP Concept One Panelboard 864mm IP40 DIN 48 Way No Main Switch Light Grey

Component type	Small distribution board
Range	Concept One
Model	N/A
Alternative	MD6PO48LG

The Concept One Panelboard offers a core range of essential features, including an IP40 compact enclosure with a neutral finish to blend in.

ELECTRICAL	Rated current In	250 A
	Number of outgoing ways	48
	Number of poles, 18mm pitch	48
	Max. rated operation voltage Ue AC	415 V
	Rated impulse withstand voltage Uimp	6 kV
	Rated insulation voltage Ui	500 V
	Neutral terminal block	Yes
	Neutral bar rated current	250 A
	Earthing terminal block	Yes
CONSTRUCTION	Spare DIN equipment space (poles)	16
	DIN-rail	Yes
	Material housing	Steel
	Material thickness	1 mm
	Colour	Grey
	RAL-number	7035
	IP rating	IP40
	Type of cover	Door
	Material thickness cover	1 mm
	Transparent cover/door	No
	With lock	Yes
	Mounting method	Surface mounted (plaster)
MECHANICAL	Impact strength	IK07
DIMENSIONS	Height	864 mm
	Width	530 mm
	Depth	153 mm

Published on 05 August 2026

COE48LG

NHP Concept One Panelboard 864mm IP40 DIN 48 Way No Main Switch Light Grey

DIMENSIONAL DIAGRAM

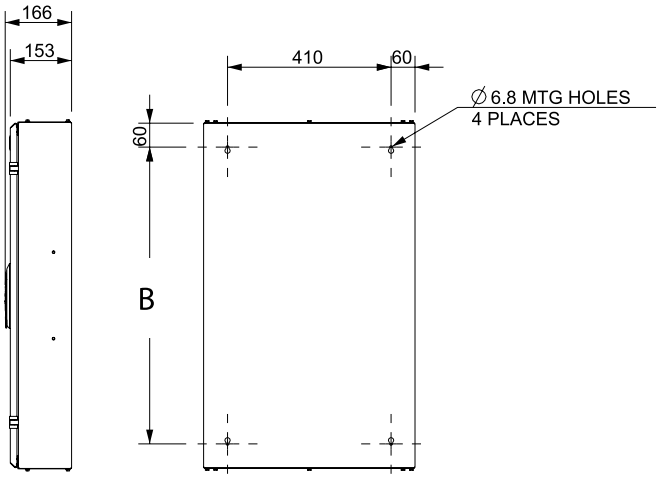

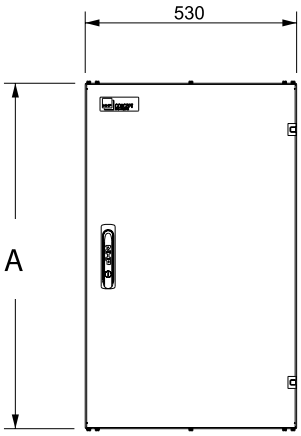

Module Size	A	B
2	432mm	312mm
3	648mm	528mm
4	864mm	744mm
5	1080mm	960mm
6	1296mm	1176mm

RELATED PRODUCTS

ACCESSORY

Item No: CECEECMSG
Required: No
Description: NHP Panelboard Accessory End Plate Steel Light Grey

Item No: CECEECMSGA
Required: No
Description: NHP Concept One Panelboard Accessory End Plate Open Type Steel Light Grey

Item No: CECEGPMS1LG
Required: No
Description: NHP Concept One Panelboard Accessory Gland Plate Steel 1.6mm

Item No: CECEGPPV5
Required: No
Description: NHP Concept One Panelboard Accessory Gland Plate PVC 5mm

Item No: CEL3160MK
Required: No
Description: NHP Panelboard Accessory Isolator Switch Kit for TemBreak Pro 160A 3Pole suits NC Chassis

Item No: CEL3250MK
Required: No
Description: NHP Panelboard Accessory Isolator Switch Kit for TemBreak Pro 250A 3Pole suits NC Chassis

COE48LG

NHP Concept One Panelboard 864mm IP40 DIN 48 Way No Main Switch Light Grey

RELATED PRODUCTS

ACCESSORY

Item No: CELAELK1W

Required: No

Description: NHP Panelboard Accessory Emergency Lighting Test Unit Push Button Open Type

Item No: CELAELK2W

Required: No

Description: NHP Panelboard Accessory Emergency Lighting Test Unit Key Switch Open Type

Item No: CELEXTLK1

Required: No

Description: NHP Panelboard Accessory External Light Kit Time Clock 1 CH Contact 2 NO Contacts 25A

Item No: CELEXTLK2

Required: No

Description: NHP Panelboard Accessory External Light Kit Time Clock 2 CH Contacts 2 NO Contacts 25A

Item No: CELEXTLKC

Required: No

Description: NHP Panelboard Accessory External Light Kit Time Clock 1 CH Contact 2 NO Contacts 25A

Item No: CELHDSPPP

Required: No

Description: NHP Panelboard Accessory Door Swing Handle Pad Lockable 10mm

Item No: CELHDSPS9

Required: No

Description: NHP Panelboard Accessory Door Swing Handle 92268

Item No: CELHDSPSC

Required: No

Description: NHP Panelboard Accessory Door Swing Handle CI001

Item No: CELMCCB3100

Required: No

Description: NHP Panelboard Accessory Main Switch Kit MCCB A250E3100TM 3P Adj 63 to 100A

Item No: CELMCCB3160

Required: No

Description: NHP Panelboard Accessory Main Switch Kit MCCB A250E3160TM 3P Adj 100 to 160A

Item No: CELMCCB3200

Required: No

Description: NHP Panelboard Accessory Main Switch Kit MCCB A250E3200TM 3P Adj 125 to 200A

Item No: CELMCCB363

Required: No

Description: NHP Panelboard Accessory Main Switch Kit MCCB P250F363TM 3P Adj 40 to 63A

Item No: CELSURGEK1

Required: No

Description: NHP Concept Panelboard Accessory Surge Type 2 Loom Labels Kit 40kA

Item No: COEACC21LG

Required: No

Description: NHP Concept One Panelboard Accessory Module 432mm IP40 DIN 21 Way Light Grey

Item No: COEACC2MELG

Required: No

Description: NHP Concept One Panelboard Accessory Module 432mm IP40 with Blank Escutcheon Light Grey

Item No: COEACC3MELG

Required: No

Description: NHP Concept One Panelboard Accessory Module 648mm IP40 with Blank Escutcheon Light Grey

Item No: COEACC42LG

Required: No

Description: NHP Concept One Panelboard Accessory Module 432mm IP40 DIN 42 Way Light Grey

RELATED PRODUCTS

ACCESSORY

Item No: COEACC63LG

Required: No

Description: NHP Concept One Panelboard Accessory Module 648mm IP40 DIN 48 Way Light Grey

Item No: COEFK4MLG

Required: No

Description: NHP Concept One Panelboard Flush Kit 4 Modules 864mm Light Grey

Item No: COEGT2M

Required: No

Description: NHP Concept One Panelboard Gear Tray 2 Modules 432mm Light Grey

Item No: COEGT3M

Required: No

Description: NHP Concept One Panelboard Gear Tray 3 Modules 648mm Light Grey

Item No: DA28400

Required: No

Description: STEGO Pressure Compensation Device Plastic M40 IP66 and X9K Qty 2

Item No: DA28404000

Required: No

Description: STEGO Pressure Compensation Device Aluminium M12 IP67 Qty 1

Item No: DA28406

Required: No

Description: STEGO Pressure Compensation Device Plastic M12 IP66 and X9K Qty 2

Item No: DA28420000

Required: No

Description: STEGO Pressure Compensation Device Plastic M40 IP66 Qty 1

Item No: DA28455

Required: No

Description: STEGO Pressure Compensation Device 303 Stainless M40 IP66 and X9K

Item No: DD084

Required: No

Description: STEGO Drainage Device Plastic IP66 and IP67 and IP69K M50