813SV480V

Allen-Bradley 813S Voltage Relay Three Phase 480V

MOTOR PROTECTION



Component type	Voltage monitoring relay
Range	813S
Model	N/A
Product status	Existing

The Allen-Bradley Bulletin 813S Voltage Monitoring Relays offer state-of-the-art supplementary protective functions that are easily added and applied to motor control circuits. Available in single and three-phase options featuring adjustable time delay settings, automatic reset, programmable latching or inhibit settings, and indicator lights.

ELECTRICAL	Type of voltage measuring range	AC
	Voltage measuring range 1	440-480 V
	Number of contacts as change-over contact	3
	Voltage type for actuating	AC
CONSTRUCTION	IP rating	IP20
DIMENSIONS	Height	80 mm
	Width	45 mm
	Depth	99.5 mm

Published on 30 September 2026

DIMENSIONAL DIAGRAM

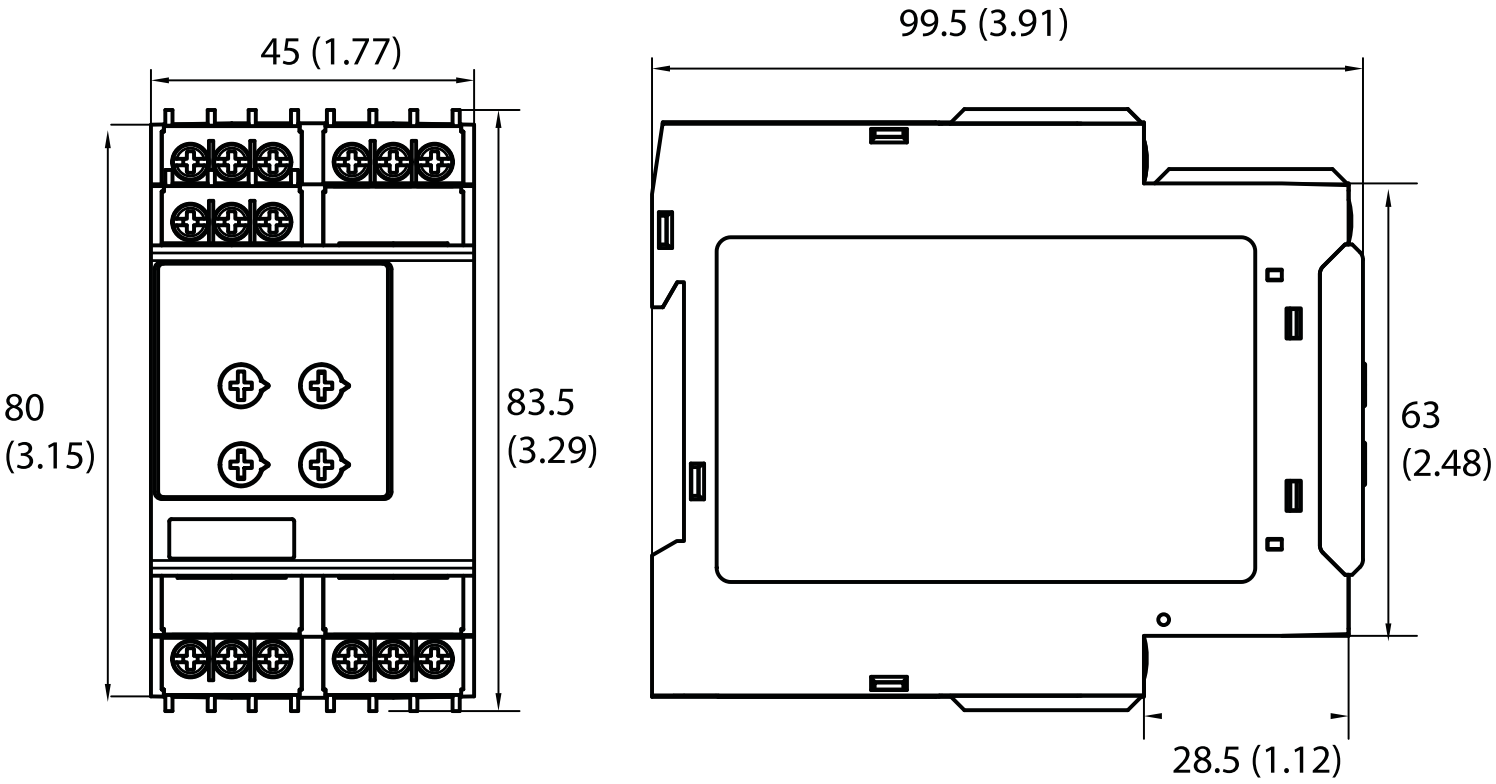

Dimensions shown are in millimeters (inches)