813SV3110V

Allen-Bradley 813S Three Phase Voltage Monitor Relay Under and Over voltage Protect 110 to 115VAC

MOTOR PROTECTION



Component type	Voltage monitoring relay
Range	813S
Model	N/A
Product status	Existing

The Allen-Bradley Bulletin 813S Voltage Monitoring Relays offer state-of-the-art supplementary protective functions that are easily added and applied to motor control circuits. Available in single and three-phase options featuring adjustable time delay settings, automatic reset, programmable latching or inhibit settings, and indicator lights.

ELECTRICAL	Type of voltage measuring range	AC
	Voltage measuring range 1	110-115 V
	Number of contacts as change-over contact	3
	Voltage type for actuating	AC
CONSTRUCTION	IP rating	IP20
DIMENSIONS	Height	80 mm
	Width	45 mm
	Depth	99.5 mm

Published on 30 September 2026

813SV3110V

Allen-Bradley 813S Three Phase Voltage Monitor Relay Under and Over voltage Protect 110 to 115VAC

MOTOR PROTECTION

DIMENSIONAL DIAGRAM

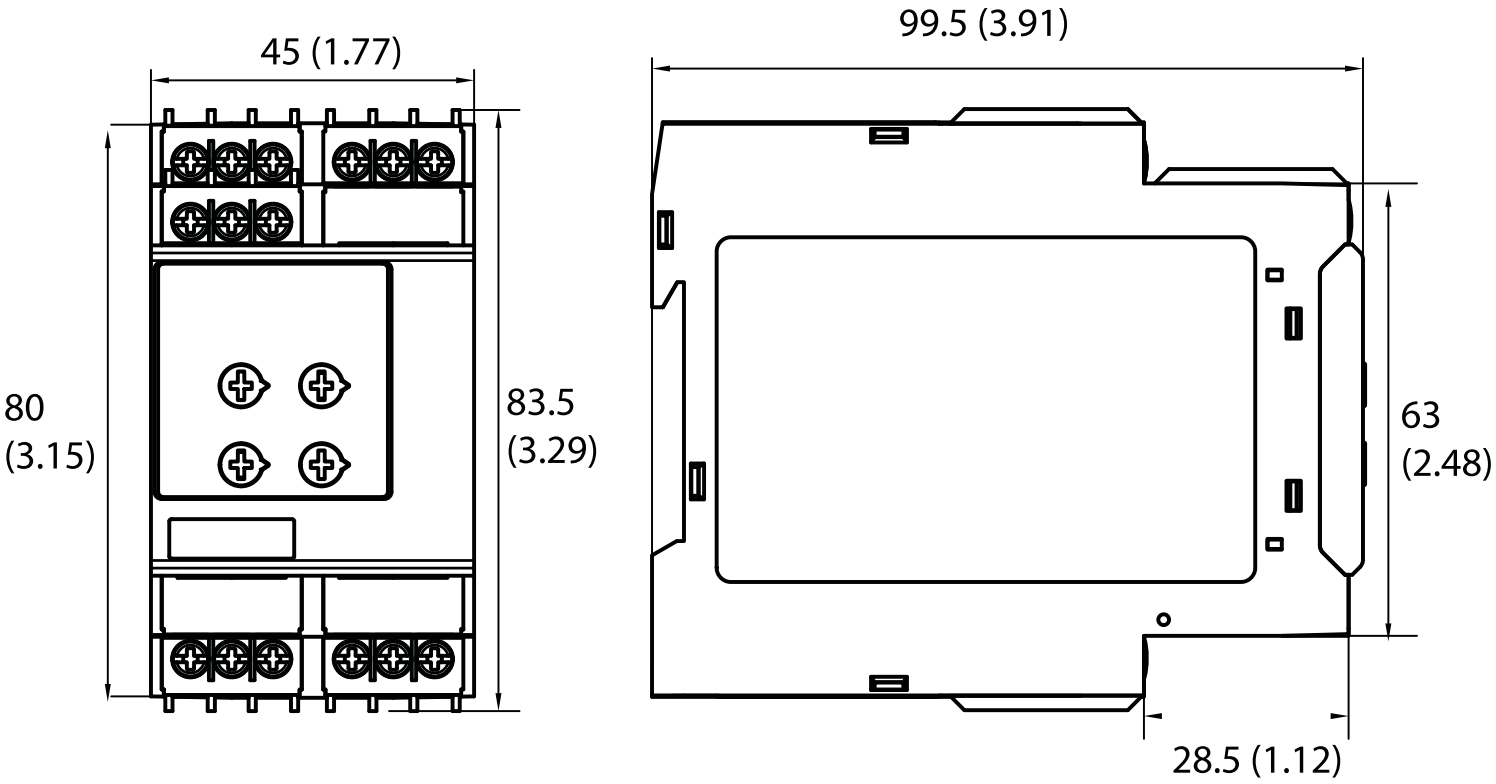

Dimensions shown are in millimeters (inches)

Published on 30 September 2026