# 700HNK41AZ24

**Allen-Bradley 700-HN Miniature Timing Relay 1 CO Ultra Slim Multi function 0.1sec to 10min 24V DC**

GENERAL PURPOSE RELAYS

Allen-Bradley

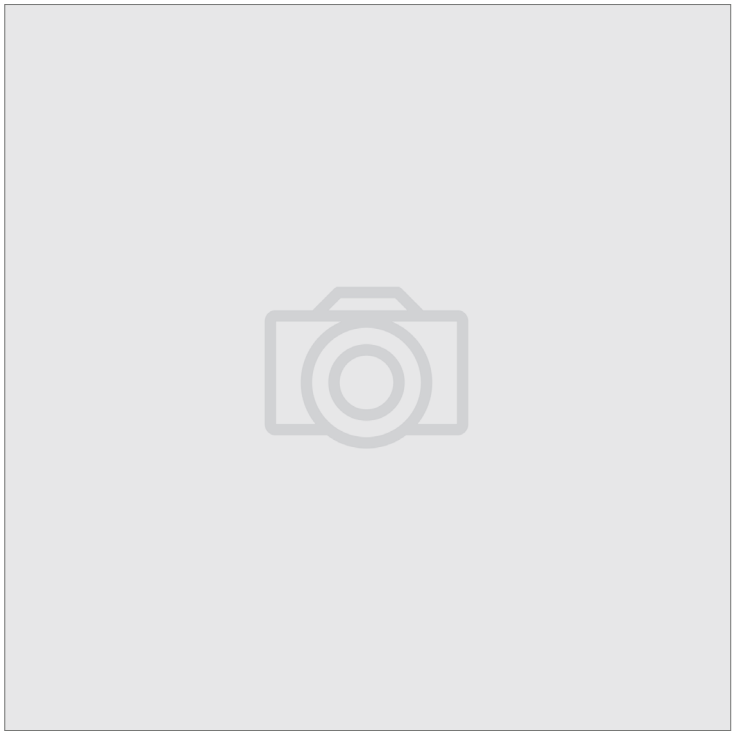

| | |
|---|---|
| **Component type** | Timer relay |
| **Range** | Panel Mount and Power Relays |
| **Model** | N/A |
| **Product status** | Phased Out |

| | | |
|---|---|---|
| **ELECTRICAL** | Voltage type for actuating | AC/DC |
| | Rated control supply voltage Us at DC | 24 V |
| | Rated control supply voltage Us at AC 50HZ | 24-240 V |
| | Number of outputs, delayed, change-over contact | 1 |
| | Nominal current | 5 A |
| | Type of electric connection | Screw connection |
| | Function delay-on energization | No |
| | Function delay on de-energization | No |
| | Function floating contact on energization | No |
| | Function floating contact on de-energization | No |
| | Function star-delta | No |
| | Function pulse shaping | No |
| | Function flashing, starting with pause, fixed time | No |
| | Function flashing, starting with pulse, fixed time | No |
| | Clock function, starting with pause, variable | Yes |
| | Clock function, starting with pulse, variable | Yes |
| | Time range | 0.5-600 s |
| | Time setting accuracy | 5 % |
| | Rated power | 0.5 W |
| | Power supply reset time | 50 ms |
| | Power consumption | 0.5 VA |
| | Electrical lifespan (control contacts) | 200000 c (contacts) |
| **CONSTRUCTION** | Degree of protection (IP), front side | IP20 |
| **MECHANICAL** | Suitable for DIN rail (top hat rail) mounting | Yes |





Published on 14 July 2025

# 700HNK41AZ24

**Allen-Bradley 700-HN Miniature Timing Relay 1 CO Ultra Slim Multi function 0.1sec to 10min 24V DC**

GENERAL PURPOSE RELAYS

| | | |
|---|---|---|
| **MECHANICAL** | Mechanical lifetime (control contacts) | 3.0E7 c (contacts) |
| | Max. shock acceleration | 50 g |
| | Max. vibration acceleration | 4 m/s² |
| | Max. vibration frequency, operational | 100 Hz |
| **DIMENSIONS** | Height | 80 mm |
| | Depth | 109 mm |
| | Width | 22.5 mm |
| **ENVIRONMENT** | Operating temperature | -25…45 °C |

## DIMENSIONAL DIAGRAM

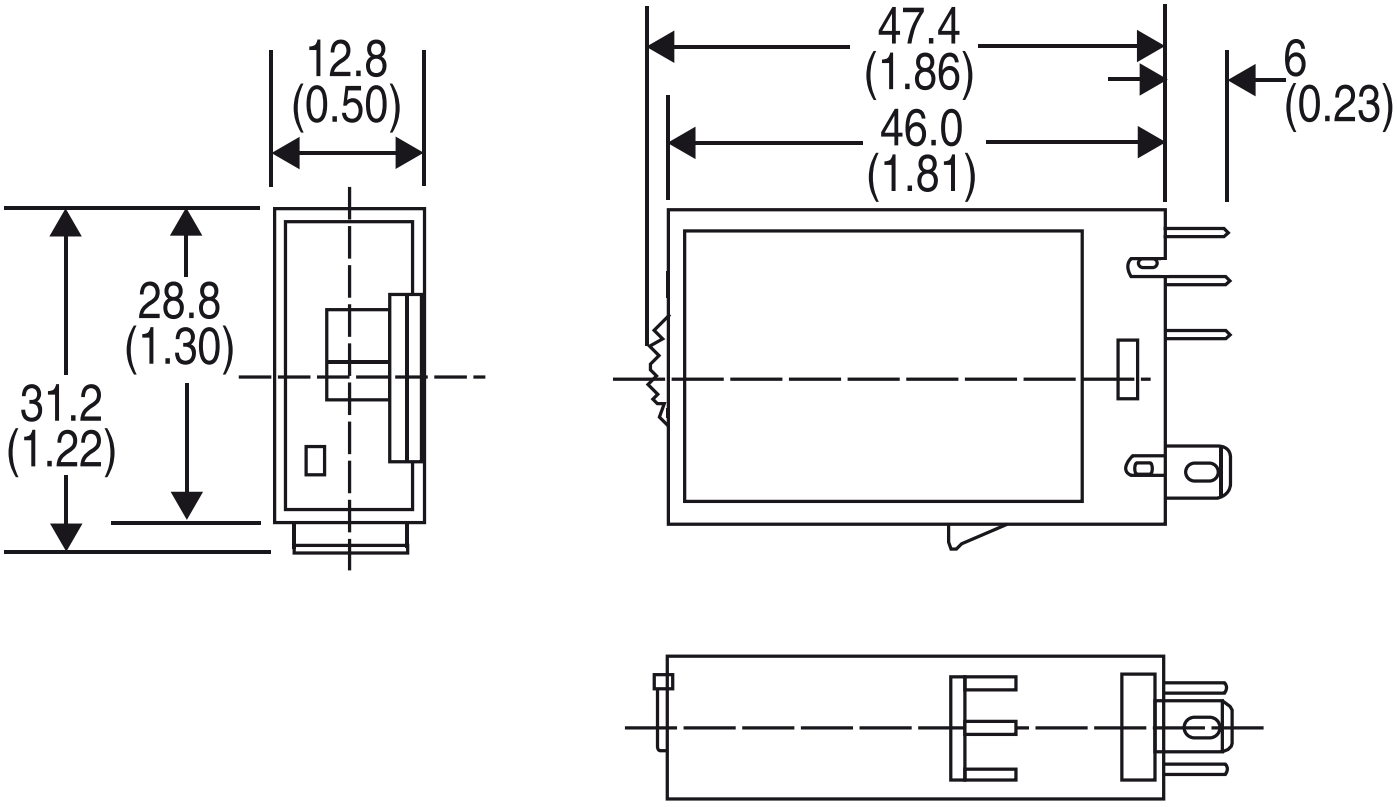


Bulletin 700-HNK41 SPDT Contact
Approximate Dimensions



Published on 14 July 2025