# 700HK32A24L

**Allen-Bradley 700-HK General Purpose Slim Line Relay 8A 2 CO DPDT 240V AC Coil with Pilot Light**

GENERAL PURPOSE RELAYS

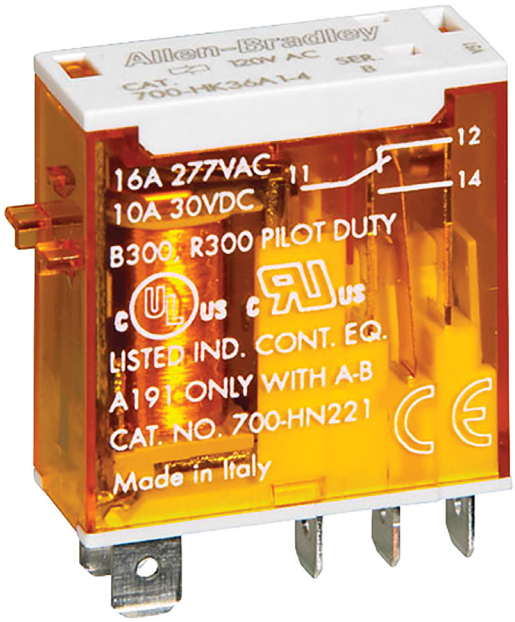


| | |
|---|---|
| **Component type** | Switching relay |
| **Range** | 700HK |
| **Model** | N/A |
| **Product status** | Existing |

The Allen-Bradley 700-HK series of slimline general purpose relays is a reliable and efficient switching solution for use in a wide range of applications. Capable of handling voltages in both 16A SPDT and 8A DPDT configurations. Available with manual override and push-to-test options, slot-to-insert markers and jumpers, gold plated contact options, and able to accommodate plug-in modules.

| | | |
|---|---|---|
| **ELECTRICAL** | Nominal current | 8 A |
| | Nominal voltage AC | 250 V |
| | Number of contacts as change-over contact | 2 |
| | Rated switching power at AC-1 | 2000 VA |
| | Rated switching power at AC-15, 230V | 350 VA |
| | Breaking capacity at DC-1, 30V | 6 A |
| | Voltage type for actuating | AC |
| | Control supply voltage Us at AC 50HZ | 240 V |
| | Control supply voltage Us at AC 60HZ | 240 V |
| | With LED indication | Yes |
| | Type of electric connection | Plug-in connection |
| | Electrical life at Un, In (service cycles) | 30000 cycles |
| | Operating voltage | 192-264 V |
| **CONSTRUCTION** | Material contact | Silver nickel |
| | Suitable for plug-in socket mounting | Yes |
| | IP rating | IP20 |
| **MECHANICAL** | Mechanical life (service cycles) | 1.0E7 cycles |
| | Max. shock acceleration | 50 g |
| | Max. vibration acceleration | 5 m/s² |
| | Max. vibration frequency, operational | 2000 Hz |
| **DIMENSIONS** | Width | 12.4 mm |
| | Height | 29 mm |
| | Depth | 32.8 mm |
| **ENVIRONMENT** | Operating temperature | -40…70 °C |



Published on 23 October 2026

# 700HK32A24L

**Allen-Bradley 700-HK General Purpose Slim Line Relay 8A 2 CO DPDT 240V AC Coil with Pilot Light**

GENERAL PURPOSE RELAYS

## DIMENSIONAL DIAGRAM

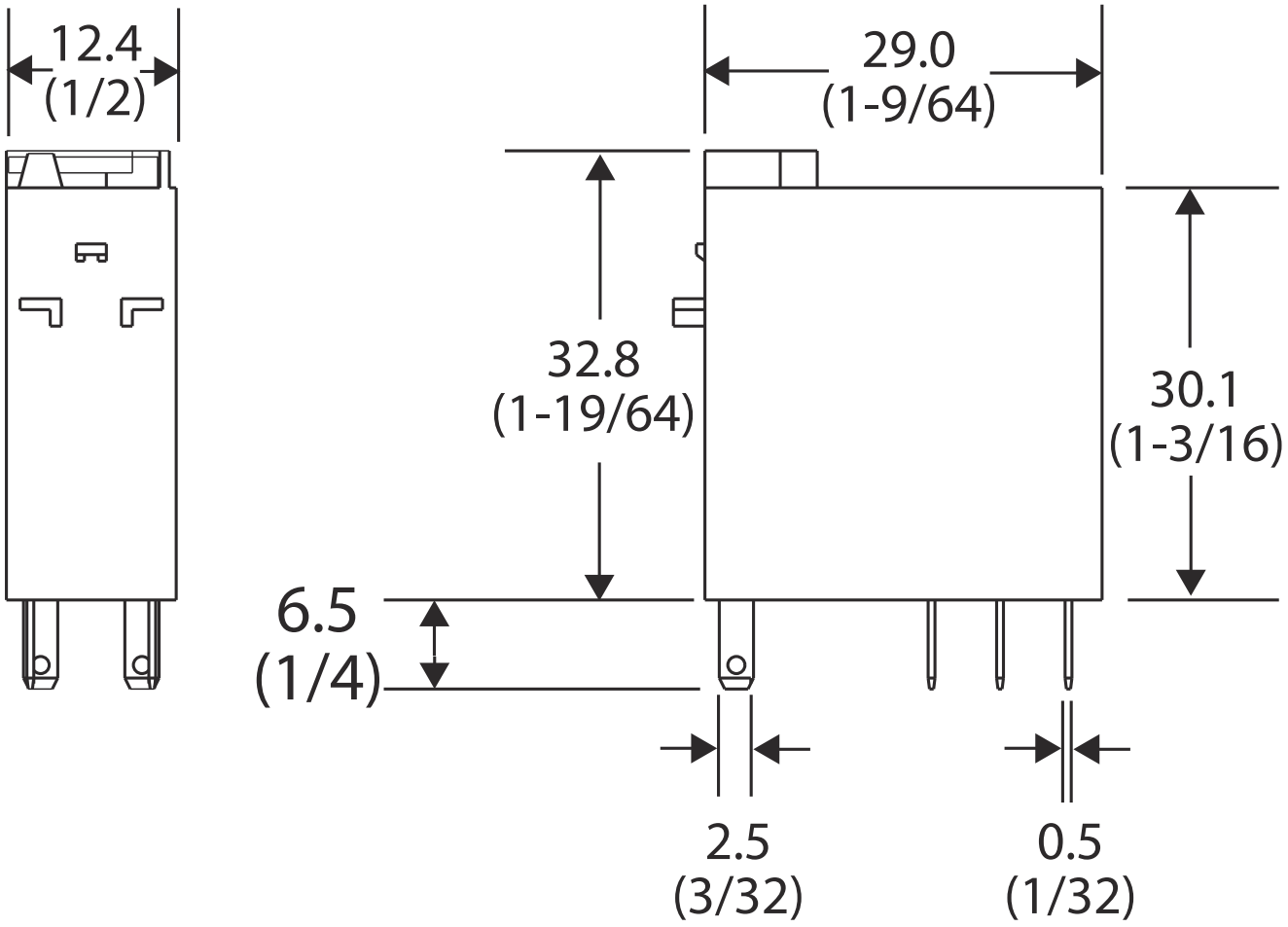


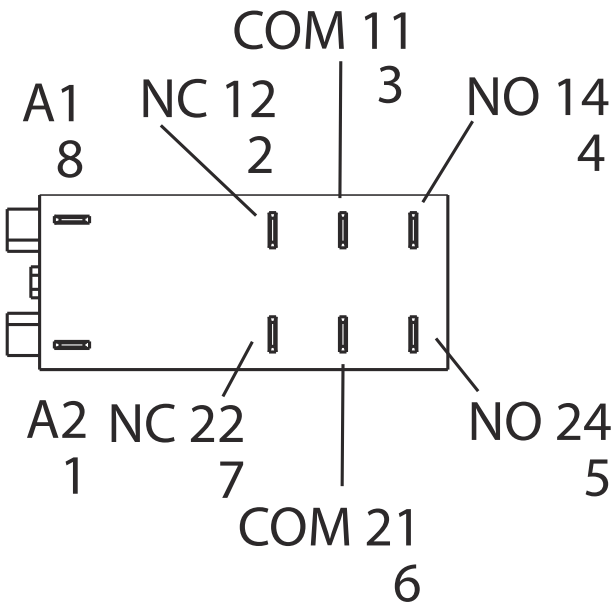




Published on 23 October 2026