700HC14A2

Allen-Bradley 700-HC Plug In Relay 7A 4CO 240VAC Coil Gold Contacts Low Energy Rating 10V 1mA

GENERAL PURPOSE RELAYS

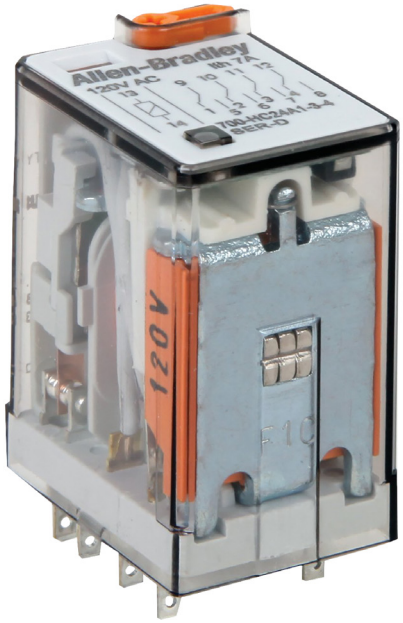

Component type	Switching relay
Range	Panel Mount and Power Relays
Model	N/A
Product status	Existing

ELECTRICAL	Nominal current	7 A
	Nominal voltage AC	250 V
	Max. rated operation voltage Ue AC	277 V
	Number of contacts as change-over contact	4
	Rated switching power at AC-1	1750 VA
	Rated switching power at AC-15, 230V	350 VA
	Breaking capacity at DC-1, 30V	7 A
	Voltage type for actuating	AC
	Control supply voltage Us at AC 50HZ	240 V
	Control supply voltage Us at AC 60HZ	240 V
	Type of electric connection	Plug-in connection
	Electrical life at Un, In (service cycles)	100000 cycles
	Operating voltage	192-264 V
CONSTRUCTION	Material contact	Other not-copper alloys
	Suitable for plug-in socket mounting	Yes
	IP rating	IP20
	Material of contact surface	Gold
MECHANICAL	Mechanical life (service cycles)	2.0E7 cycles
DIMENSIONS	Width	20.7 mm
	Height	27.7 mm
	Depth	37.2 mm
ENVIRONMENT	Operating temperature	-30…55 °C

Published on 30 September 2026

700HC14A2

Allen-Bradley 700-HC Plug In Relay 7A 4CO 240VAC Coil Gold Contacts Low Energy Rating 10V 1mA

GENERAL PURPOSE RELAYS

DIMENSIONAL DIAGRAM

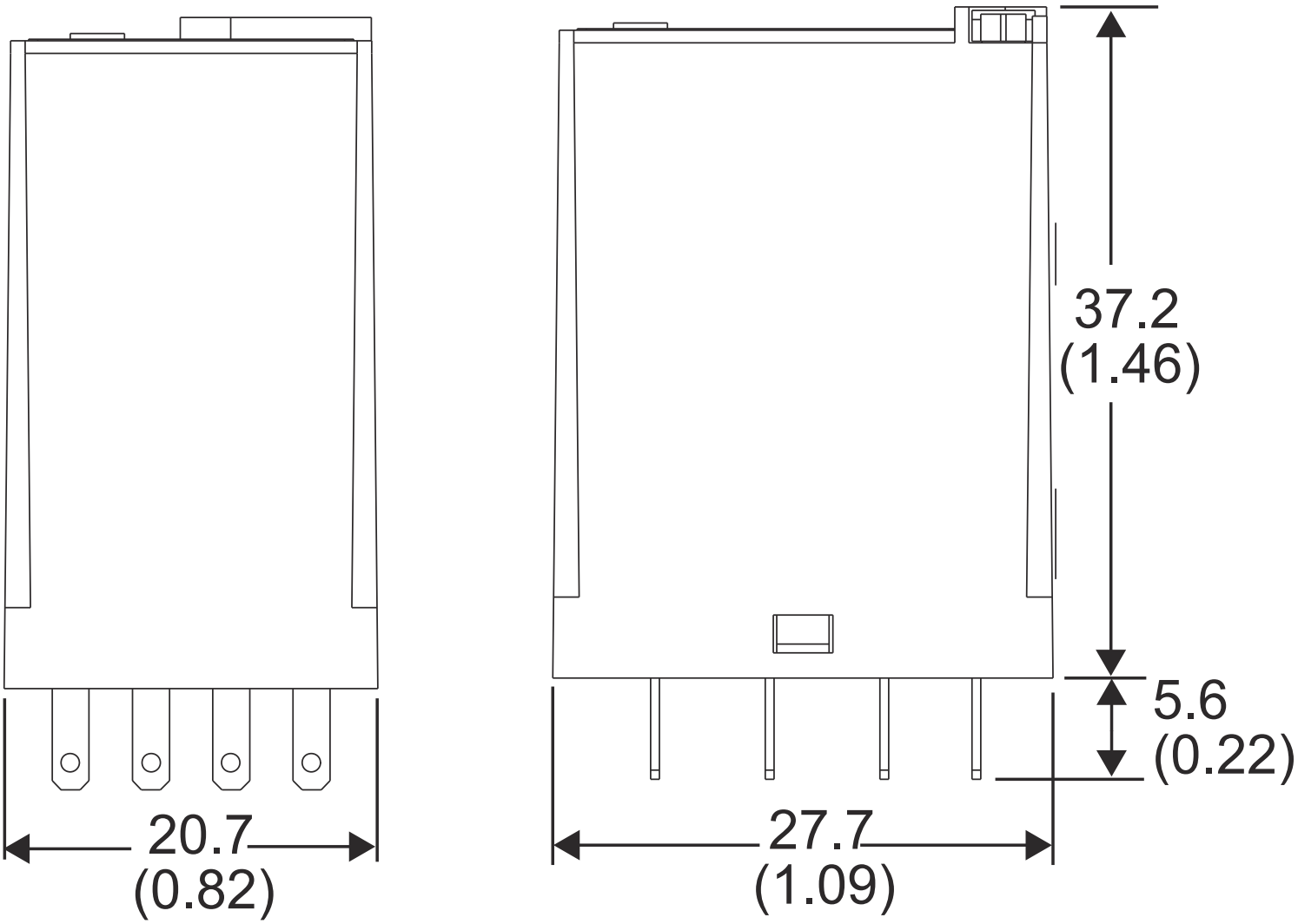

Published on 30 September 2026