# 700HB33A2

**Allen-Bradley 700-HB General Purpose Blade Base Relay 15A 3 Changeover 3PDT 240V AC Coil**

GENERAL PURPOSE RELAYS



| | |
|---|---|
| **Component type** | Switching relay |
| **Range** | Panel Mount and Power Relays |
| **Model** | N/A |
| **Product status** | Existing |

| | | |
|---|---|---|
| **ELECTRICAL** | **Nominal current** | 15 A |
| | **Nominal voltage AC** | 250 V |
| | **Number of contacts as change-over contact** | 3 |
| | **Rated switching power at AC-1** | 3750 VA |
| | **Rated switching power at AC-15, 230V** | 750 VA |
| | **Breaking capacity at DC-1, 30V** | 15 A |
| | **Voltage type for actuating** | AC |
| | **Control supply voltage Us at AC 50HZ** | 240 V |
| | **Control supply voltage Us at AC 60HZ** | 240 V |
| | **Type of electric connection** | Plug-in connection |
| | **Electrical life at Un, In (service cycles)** | 100000 cycles |
| | **Operating voltage** | 192-264 V |
| **CONSTRUCTION** | **Material contact** | Silver cadmium-oxide |
| | **Suitable for plug-in socket mounting** | Yes |
| | **IP rating** | IP40 |
| **MECHANICAL** | **Mechanical life (service cycles)** | 1.0E7 cycles |
| | **Max. shock acceleration** | 50 g |
| | **Max. vibration acceleration** | 5 m/s² |
| **DIMENSIONS** | **Width** | 38.2 mm |
| | **Height** | 35.8 mm |
| | **Depth** | 51.4 mm |
| **ENVIRONMENT** | **Operating temperature** | -40…70 °C |



Published on 23 October 2026

# 700HB33A2

**Allen-Bradley 700-HB General Purpose Blade Base Relay 15A 3 Changeover 3PDT 240V AC Coil**

GENERAL PURPOSE RELAYS

## DIMENSIONAL DIAGRAM

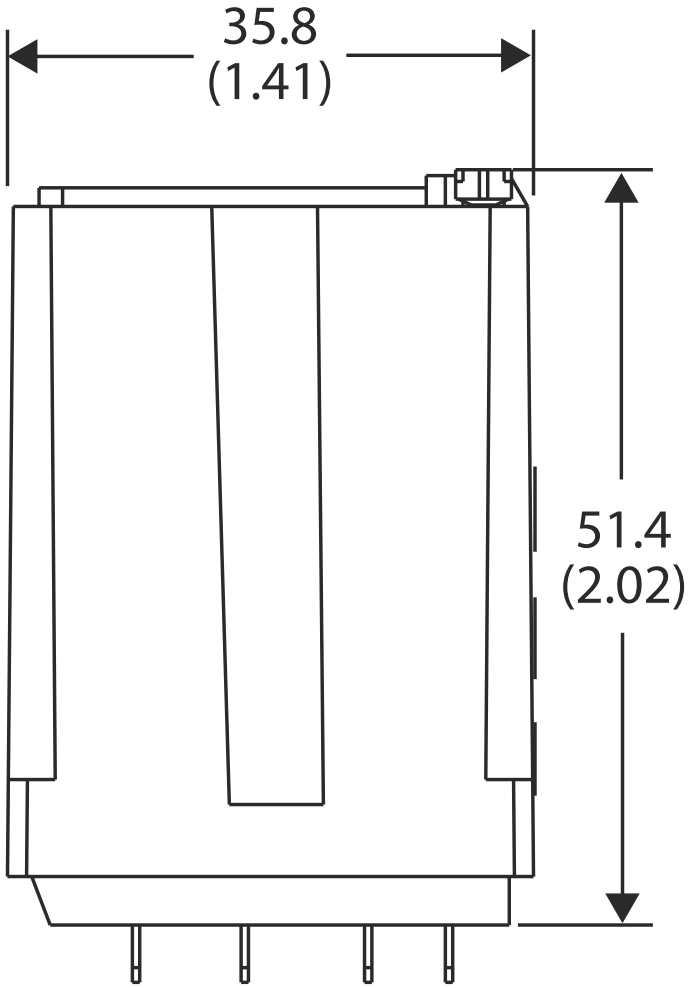


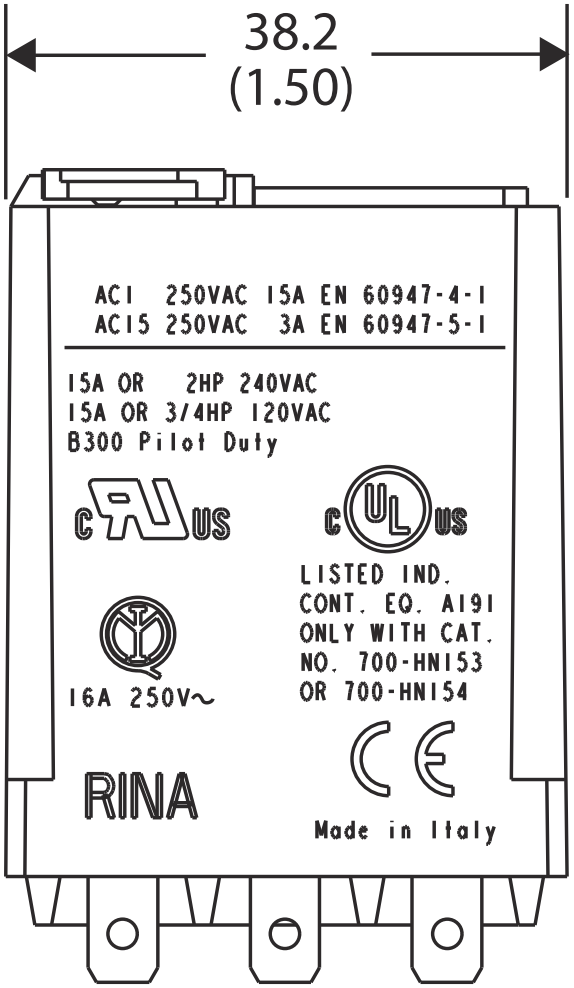




Published on 23 October 2026