700HB33A1

Allen-Bradley 700-HB General Purpose Blade Base Relay 15A 3 Changeover 3PDT 120V AC Coil

GENERAL PURPOSE RELAYS



Component type	Switching relay
Range	Panel Mount and Power Relays
Model	N/A
Product status	Existing

ELECTRICAL	**Nominal current**	15 A
	Nominal voltage AC	250 V
	Number of contacts as change-over contact	3
	Rated switching power at AC-1	3750 VA
	Rated switching power at AC-15, 230V	750 VA
	Breaking capacity at DC-1, 30V	15 A
	Voltage type for actuating	AC
	Control supply voltage Us at AC 50HZ	120 V
	Control supply voltage Us at AC 60HZ	120 V
	Type of electric connection	Plug-in connection
	Electrical life at Un, In (service cycles)	100000 cycles
	Operating voltage	96-132 V
CONSTRUCTION	**Material contact**	Silver cadmium-oxide
	Suitable for plug-in socket mounting	Yes
	IP rating	IP40
MECHANICAL	**Mechanical life (service cycles)**	1.0E7 cycles
	Max. shock acceleration	50 g
	Max. vibration acceleration	5 m/s²
DIMENSIONS	**Width**	38.2 mm
	Height	35.8 mm
	Depth	51.4 mm
ENVIRONMENT	**Operating temperature**	-40…70 °C

Published on 23 October 2026

700HB33A1

Allen-Bradley 700-HB General Purpose Blade Base Relay 15A 3 Changeover 3PDT 120V AC Coil

GENERAL PURPOSE RELAYS

DIMENSIONAL DIAGRAM

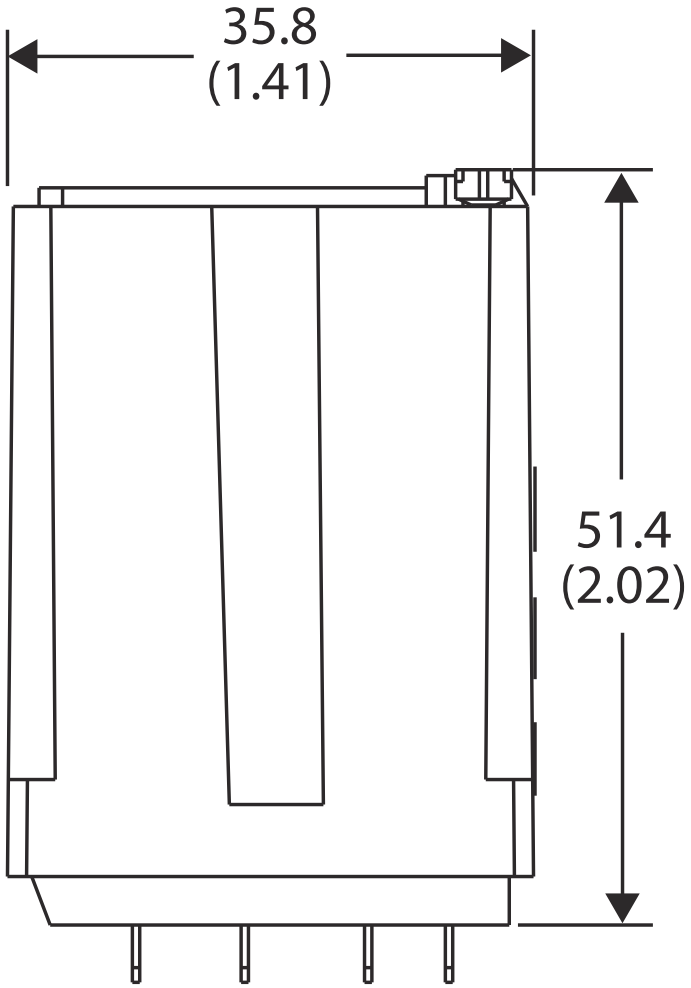

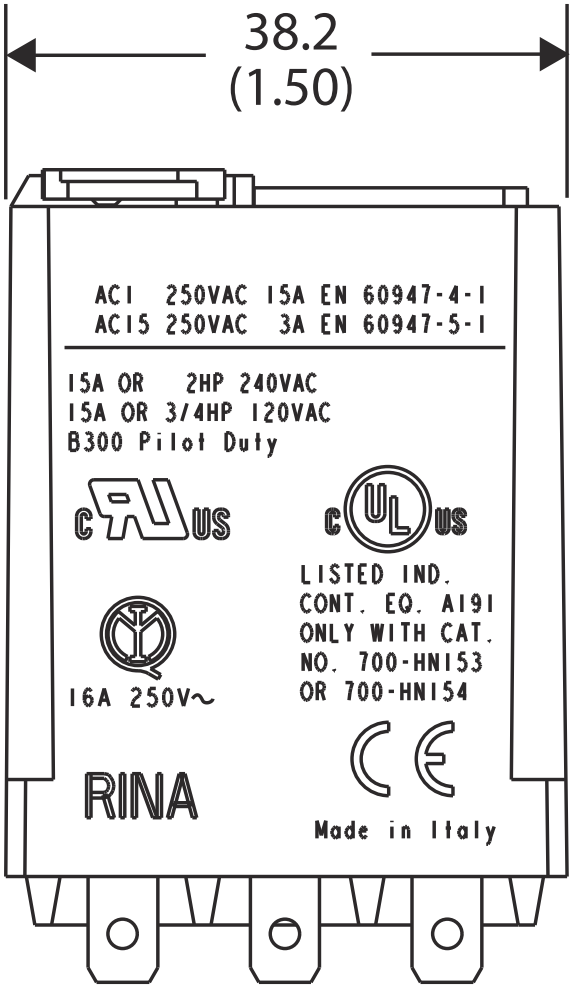

Published on 23 October 2026