# 6531110VAC

**Finder 65 Series Power Relay Flange Mount 20A 110V AC Coil 1NO 1NC Contacts**

GENERAL PURPOSE RELAYS

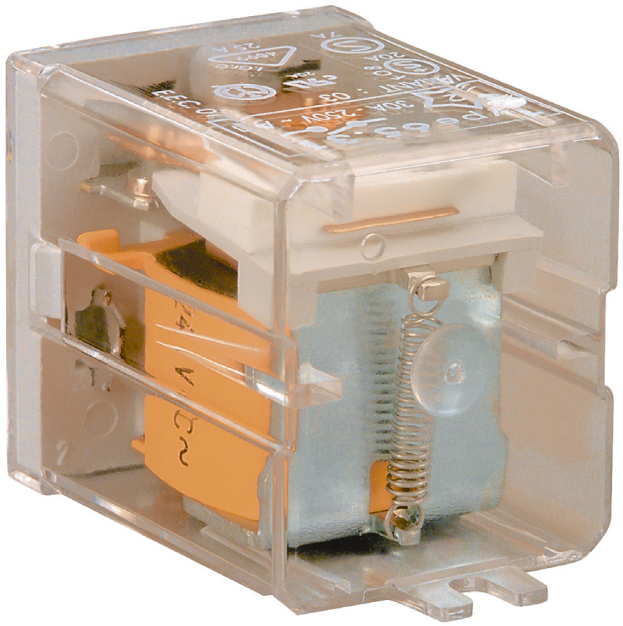

| | |
|---|---|
| **Component type** | Switching relay |
| **Range** | Panel Mount and Power Relay |
| **Model** | N/A |
| **Product status** | Existing |

The Finder General Purpose Panel Mount and Power Relays are a reliable and efficient switching solution for various applications and industries. Options include coil voltages, output current ratings, contact configurations. A modular design allows for surge suppressors, coil indication and timers. Features manual override, push-to-test, slots for markers, jumpers and gold-plated contacts.

| | | |
|---|---|---|
| **ELECTRICAL** | **Nominal current** | 20 A |
| | **Nominal voltage AC** | 250 V |
| | **Max. rated operation voltage Ue AC** | 400 V |
| | **Number of contacts as normally closed contact** | 1 |
| | **Number of contacts as normally open contact** | 1 |
| | **Drive, switching attitude** | Mono stable |
| | **Rated switching power at AC-1** | 5000 VA |
| | **Rated switching power at AC-15, 230V** | 1000 VA |
| | **Breaking capacity at DC-1, 30V** | 20 A |
| | **Breaking capacity at DC-1, 110V** | 0.8 A |
| | **Voltage type for actuating** | AC |
| | **Control supply voltage Us at AC 50HZ** | 110 V |
| | **Control supply voltage Us at AC 60HZ** | 110 V |
| | **Type of electric connection** | Soldering flag connection |
| | **Electrical life at Un, In (service cycles)** | 80000 cycles |
| | **Drive, polarization** | Polarity free |
| | **Type of switch contact** | Double contact |
| | **Material of contact insert** | Duroplast |
| | **Operating voltage** | 88-121 V |
| **CONSTRUCTION** | **Material contact** | Silver cadmium-oxide |
| | **Suitable for flange mounting** | Yes |
| **MECHANICAL** | **Mechanical life (service cycles)** | 1.0E7 cycles |
| | **Max. shock acceleration** | 20 g |
| | **Max. shock duration** | 6 ms |
| | **Max. vibration acceleration** | 20 m/s² |
| | **Max. vibration frequency, operational** | 150 Hz |





Published on 29 October 2026

# 6531110VAC

**Finder 65 Series Power Relay Flange Mount 20A 110V AC Coil 1NO 1NC Contacts**

GENERAL PURPOSE RELAYS

| | | |
|---|---|---|
| **DIMENSIONS** | Width | 32.2 mm |
| | Height | 36.5 mm |
| | Depth | 57.2 mm |
| **ENVIRONMENT** | Operating temperature | -40…75 °C |

## DIMENSIONAL DIAGRAM

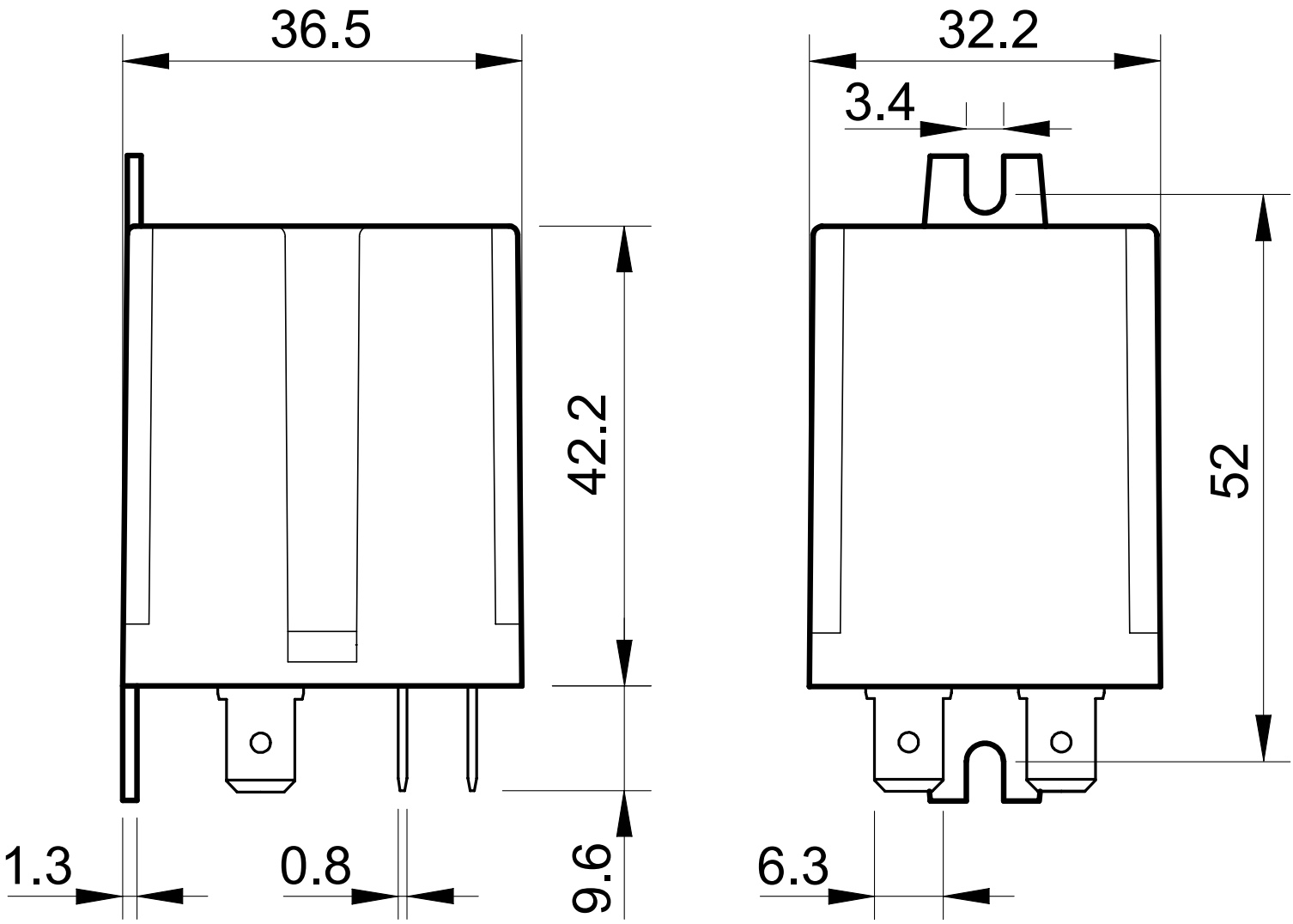




Published on 29 October 2026