6283000812VDC

Finder 62 Series Power Relay Flange Mount 16A 3CO 12V DC Coil with Mounting Bracket

GENERAL PURPOSE RELAYS



Component type	Switching relay
Range	Panel Mount and Power Relay
Model	N/A
Product status	Existing

The Finder General Purpose Panel Mount and Power Relays are a reliable and efficient switching solution for various applications and industries. Options include coil voltages, output current ratings, contact configurations. A modular design allows for surge suppressors, coil indication and timers. Features manual override, push-to-test, slots for markers, jumpers and gold-plated contacts.

ELECTRICAL	Nominal current	16 A
	Nominal voltage AC	250 V
	Max. rated operation voltage Ue AC	400 V
	Number of contacts as change-over contact	3
	Rated switching power at AC-1	4000 VA
	Rated switching power at AC-15, 230V	750 VA
	Breaking capacity at DC-1, 30V	16 A
	Breaking capacity at DC-1, 110V	0.6 A
	Voltage type for actuating	DC
	Control supply voltage Us at DC	12 V
	Type of electric connection	Soldering flag connection
	Electrical life at Un, In (service cycles)	100000 cycles
CONSTRUCTION	Material contact	Silver cadmium-oxide
	Suitable for flange mounting	Yes
MECHANICAL	Mechanical life (service cycles)	3.0E7 cycles
	Max. shock acceleration	15 g
	Max. shock duration	5 ms
	Max. vibration acceleration	20 m/s²
	Max. vibration frequency, operational	150 Hz
DIMENSIONS	Width	38.2 mm
	Height	35.8 mm
	Depth	68 mm
ENVIRONMENT	Operating temperature	-40…70 °C

Published on 29 October 2026

6283000812VDC

Finder 62 Series Power Relay Flange Mount 16A 3CO 12V DC Coil with Mounting Bracket

GENERAL PURPOSE RELAYS

DIMENSIONAL DIAGRAM

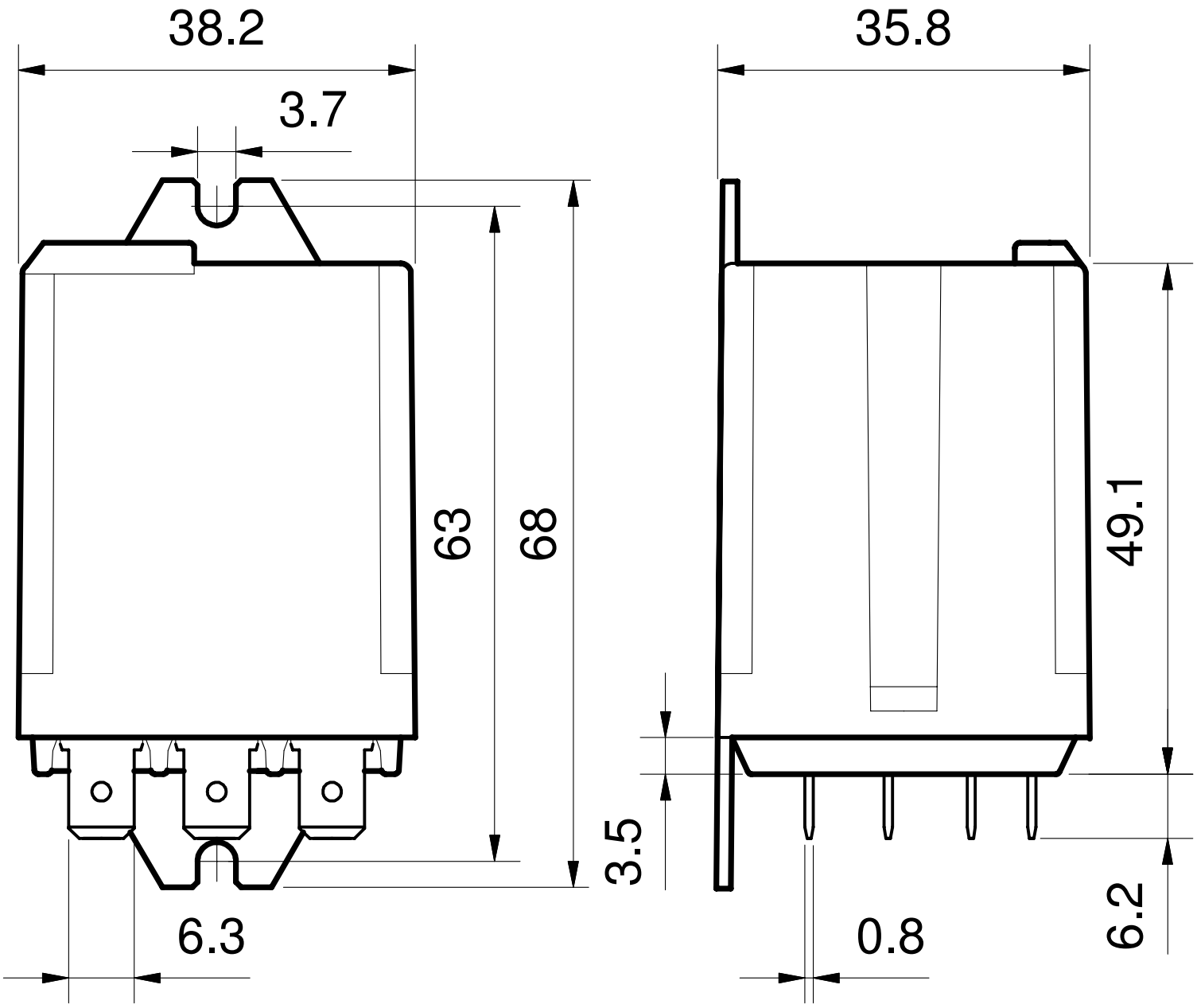

Published on 29 October 2026