623324VAC

Finder 62 Series Power Relay Plug in 16A 3CO 24V AC Coil with Pushbutton plus Mechanical Indicator

GENERAL PURPOSE RELAYS



Component type	Switching relay
Range	PCB Relay
Model	N/A
Product status	Discontinued

The Finder PCB Relays feature compact design, versatile functionality and high level performance and flexibility. Applications include electronic circuit boards, interface relays. Direct mounting onto Printed Circuit Boards (PCB's) and interface modules. Available in both AC and DC coils for wide a range of voltages, output current range as well as 1 and 2 contact options.

ELECTRICAL	**Nominal current**	16 A
	Nominal voltage AC	250 V
	Max. rated operation voltage Ue AC	400 V
	Number of contacts as change-over contact	3
	Drive, switching attitude	Mono stable
	Rated switching power at AC-1	4000 VA
	Rated switching power at AC-15, 230V	750 VA
	Breaking capacity at DC-1, 30V	16 A
	Breaking capacity at DC-1, 110V	0.6 A
	Voltage type for actuating	AC
	Control supply voltage Us at AC 50HZ	24 V
	Control supply voltage Us at AC 60HZ	24 V
	Type of electric connection	Plug-in connection
	Electrical life at Un, In (service cycles)	100000 cycles
	Drive, polarization	Polarity free
	Type of switch contact	Single contact
	Material of contact insert	Duroplast
	Operating voltage	19.2-26.4 V
CONSTRUCTION	**Material contact**	Silver cadmium-oxide
	With mechanical indicator	Yes
	With latching test button	Yes
	Suitable for plug-in socket mounting	Yes
MECHANICAL	**Mechanical life (service cycles)**	1.0E7 cycles
	Max. shock acceleration	15 g
	Max. shock duration	5 ms
	Max. vibration acceleration	20 m/s²

Published on 10 September 2026

623324VAC

Finder 62 Series Power Relay Plug in 16A 3CO 24V AC Coil with Pushbutton plus Mechanical Indicator

GENERAL PURPOSE RELAYS

MECHANICAL	Max. vibration frequency, operational	150 Hz
DIMENSIONS	Width	38.2 mm
	Height	35.8 mm
	Depth	47.6 mm
ENVIRONMENT	Operating temperature	-40…70 °C

DIMENSIONAL DIAGRAM

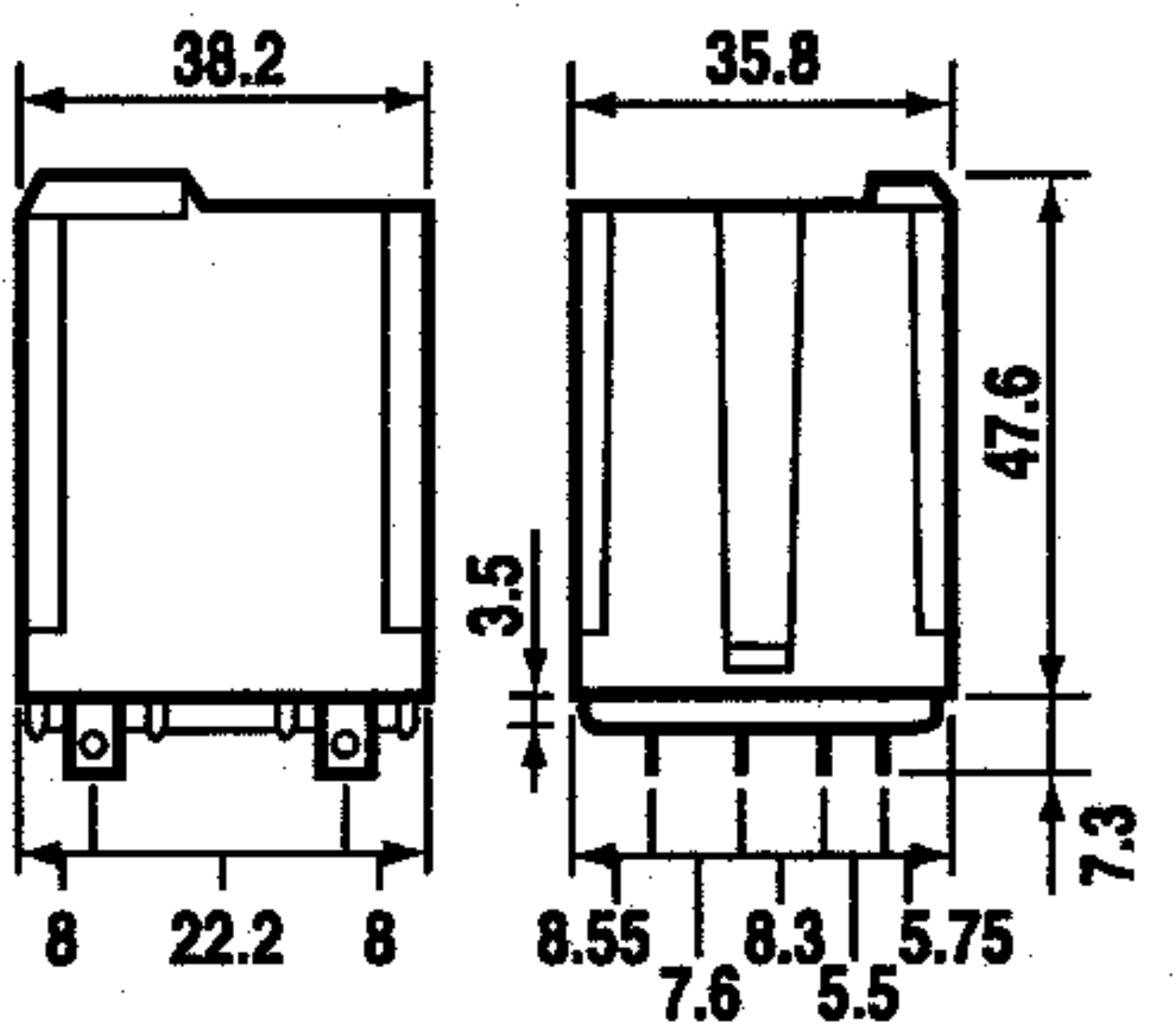

Published on 10 September 2026

RELATED PRODUCTS

ACCESSORY

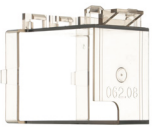

Item No: 06208

Required: No

Description: Finder Panel Mount and Power Relays Mounting Bracket for 62 Series



Item No: 8600

Required: No

Description: Finder Panel Mount and Power Relays Multi Function Timer Module for use on 9002 9003 9203 9604 Bases



Item No: 863024VACDC

Required: No

Description: Finder 86 Series Bifunction Timer Module 12 to 24V AC DC



Item No: 99020024

Required: No

Description: Finder 99 Series Green LED Module 6 to 24V AC DC



Item No: 9902002409

Required: No

Description: Finder 99 Series RC Module for Relay 6 to 24V AC DC



Item No: 9902002498

Required: No

Description: Finder 99 Series Green LED plus Varistor Module 6 24V AC DC



Item No: 99023000

Required: No

Description: Finder 99 Series Diode Module Standard Polarity 6 to 220V DC



Item No: 99029024

Required: No

Description: Finder 99 Series Green LED plus Diode Module Standard Polarity 6 to 24V DC