561154

nVent ERIFLEX High Current Terminal 600A In 1 x 95 to 240mm Out 2 x 35 to 120mm

TERMINALS AND DISTRIBUTION BLOCKS

Component type	Distributor assembly terminal blocks
Range	High Current Terminal
Model	N/A
Product status	Existing

The nVent ERIFLEX range of high current terminals come in current ratings 80A to 1940A and offer connection ratio with 1 or 2 inputs to 1 or 2 output terminals. Terminals are tin plated to cater for copper or aluminium conductors offering IP2X touch protection.

ELECTRICAL	Number of poles	1
	Rated insulation voltage Ui	1000 V
	Short time withstand current Icw, 1 sec	22.2 kA
	Max. rated current	600 A
CONSTRUCTION	Conductor material	Aluminium/copper
	With PE-rail	No
	With N-rail	No
DIMENSIONS	Conductor cross section flexible (fine-strand) with cable end sleeve	35-120 mm²
	Conductor cross section (solid, stranded)	35-120 mm²
	Height	146.4 mm
	Width	41.5 mm
	Depth	82.2 mm

Published on 01 October 2026

DIMENSIONAL DIAGRAM

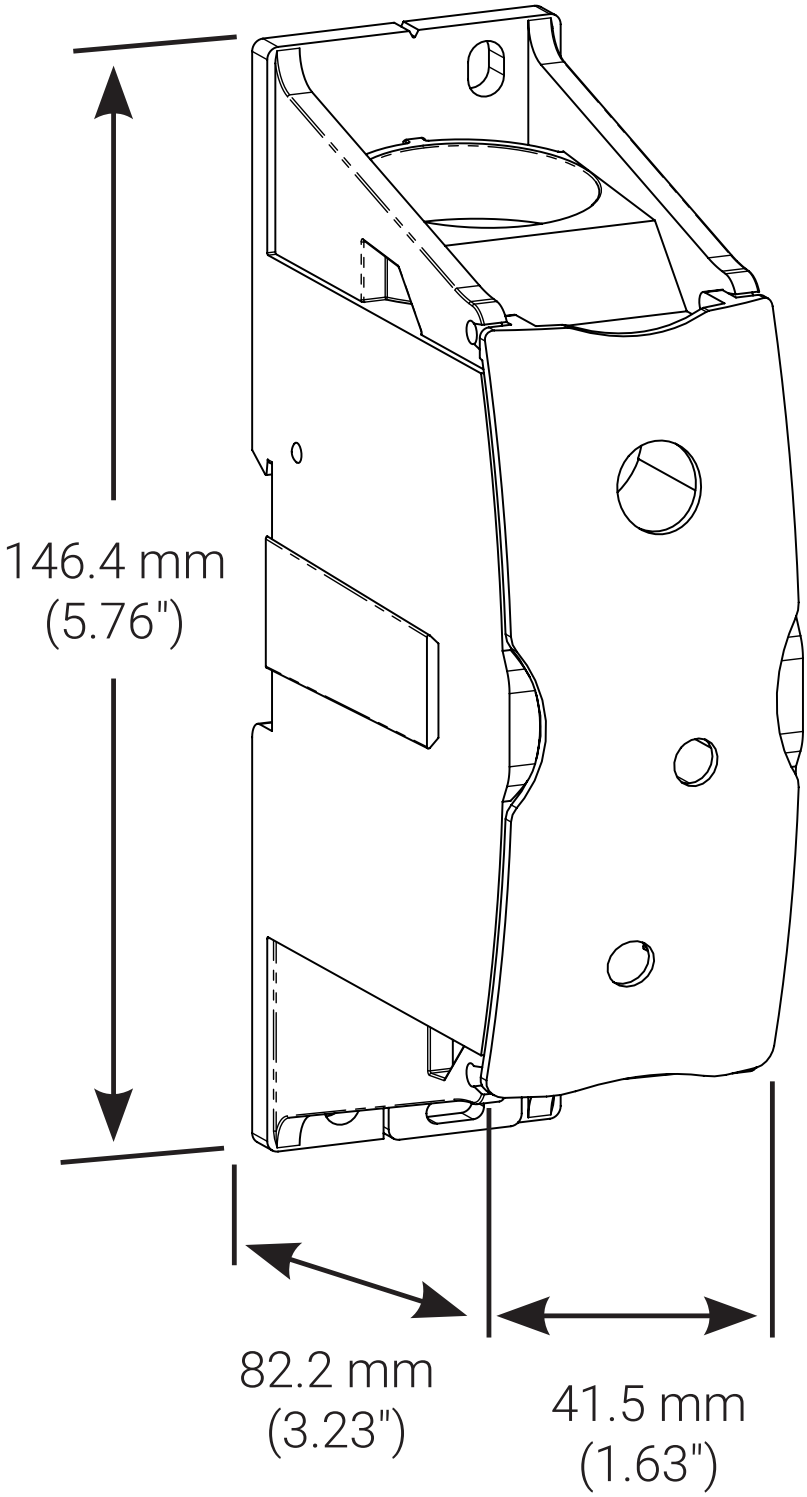

RELATED PRODUCTS

ACCESSORY

Item No: 561138

Required: No

Description: nVent ERIFLEX High Current Terminal End Clamp for DIN35 Mount or Panel Mount