5094OW4IS

Allen-Bradley FLEX 5000 I/O Safet Relay 4 Output Isolated Module

IN CABINET DISTRIBUTED IO

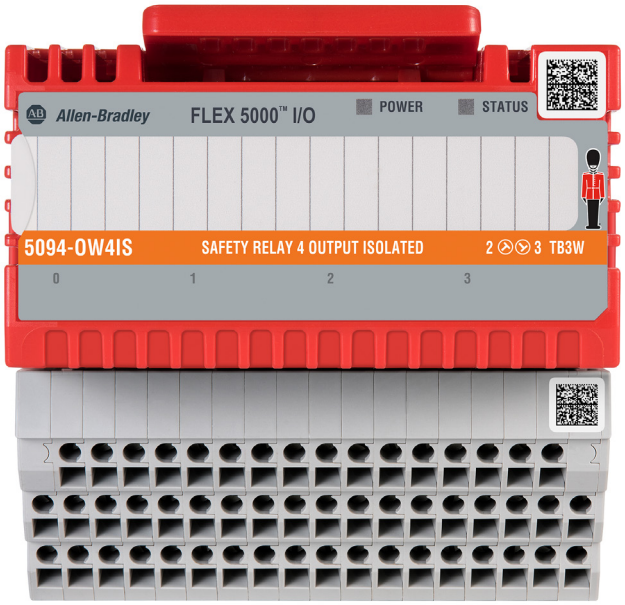

Component type	Fieldbus, decentr. periphery - analogue/digital I/O module
Range	FLEX I/O
Model	N/A
Product status	Existing

The Allen-Bradley FLEX™ I/O system offers a flexible, modular, and cost-effective solution for your industrial automation and control. The space saving design offers rack-based I/O functionality of up to eight modules and provides digital, analogue, HART analogue, and specialty I/O with 4...32 points per module with flexible mounting and wiring options.

ELECTRICAL	Type of digital output	Relay
	Type of output voltage	AC/DC
	Output voltage at digital output	5-249 V
	Number of safety outputs	4
CONSTRUCTION	Suitable for safety functions	Yes
DIMENSIONS	Width	94 mm
	Height	54 mm
	Depth	87 mm
ENVIRONMENT	Operating temperature	-40…70 °C
	Storage temperature	-40…85 °C
	Max. ambient humidity (non-condensing)	95 %

Published on 06 October 2026

5094OW4IS

Allen-Bradley FLEX 5000 I/O Safet Relay 4 Output Isolated Module

IN CABINET DISTRIBUTED IO

DIMENSIONAL DIAGRAM

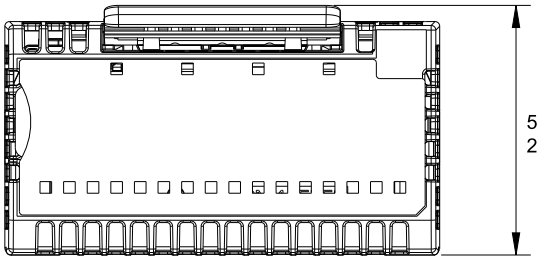

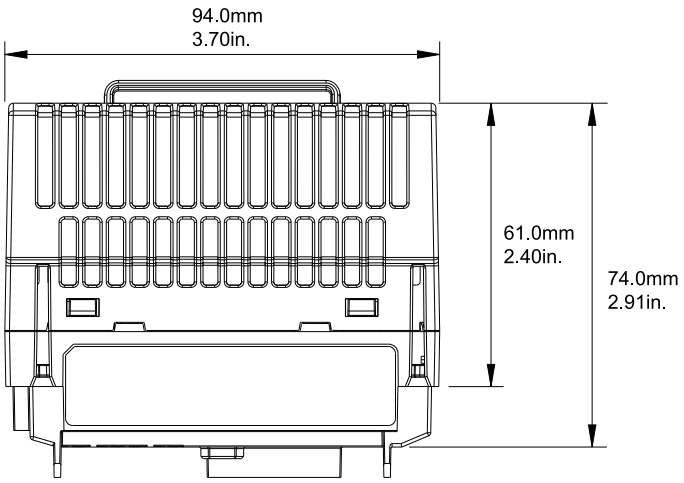

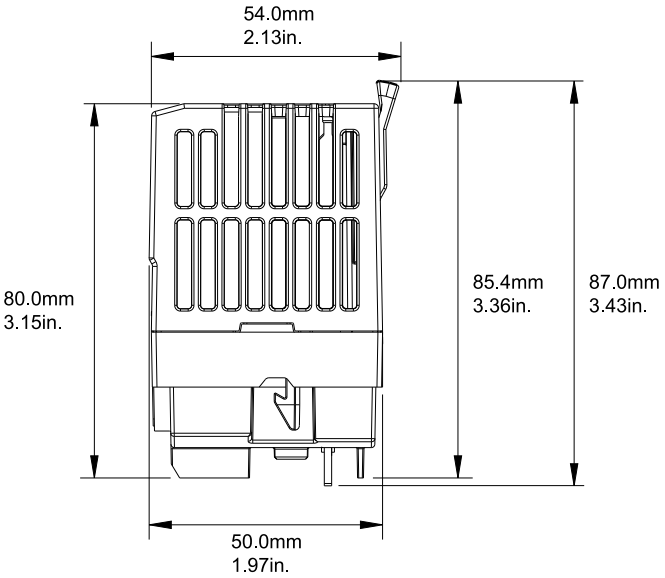

Published on 06 October 2026