5069OW16

Allen-Bradley Compact 5000 I/O 16DO Channels NO Non Isolated Relay Module

MID-RANGE CONTROL SYSTEMS



Component type	PLC digital I/O-module
Range	Compact 5000 Safety I/O
Model	N/A
Product status	Existing

Allen-Bradley Compact 5000 I/O Safety Modules provide a flexible, reliable, easy-to-use solution for integrating safety into industrial automation and control systems. Providing distributed I/O to the Compact GuardLogix 5380 and GuardLogix 5580, accessible via a 5069-AEN2TR or 5069-AENTR over an EtherNet/IP and supporting up to 31 I/O modules per controller or adapter.

ELECTRICAL	Type of digital output	Relay
	Permitted voltage at output	5264 V
	Type of output voltage	AC/DC
	Voltage type of supply voltage	AC/DC
	Digital inputs configurable	No
	Digital outputs configurable	No
	Short-circuit protection, outputs available	No
	Redundancy	No
	Type of electric connection	Screw-/spring clamp connection
CONSTRUCTION	Number of digital outputs	16
	Suitable for safety functions	No
	Time delay at signal exchange	10 ms
DIMENSIONS	Width	36 mm
	Height	144.57 mm
	Depth	105.42 mm
ENVIRONMENT	Operating temperature	0…60 °C
	Storage temperature	-40…85 °C
	Max. ambient humidity (non-condensing)	95 %

Published on 06 October 2026

5069OW16

Allen-Bradley Compact 5000 I/O 16DO Channels NO Non Isolated Relay Module

MID-RANGE CONTROL SYSTEMS

DIMENSIONAL DIAGRAM

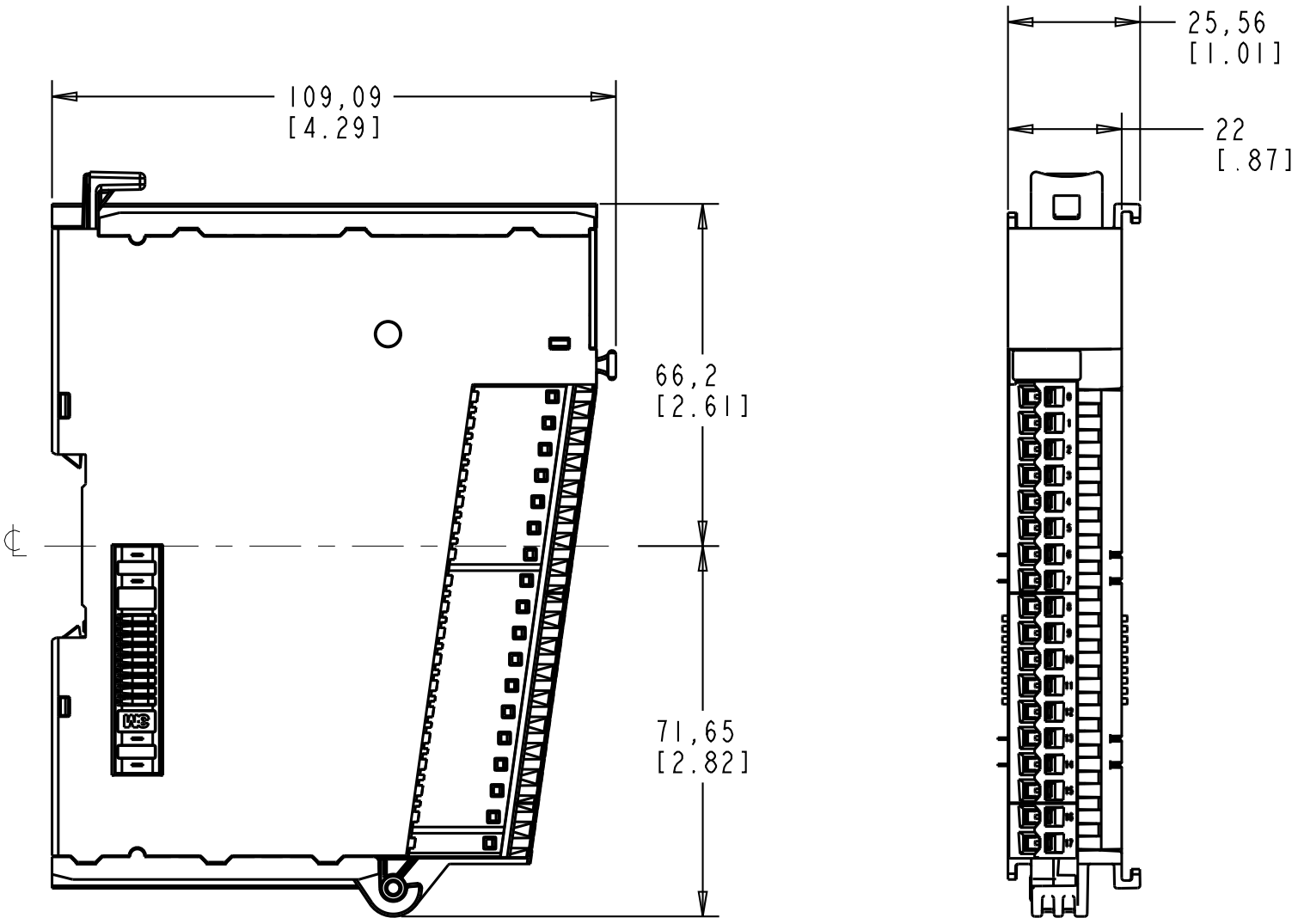

Published on 06 October 2026