# 46520054240VAC

**Finder 46 Series Miniature Relay 8A 2 CO 240V AC Coil with PB plus LED plus Mech. Indicator**

GENERAL PURPOSE RELAYS

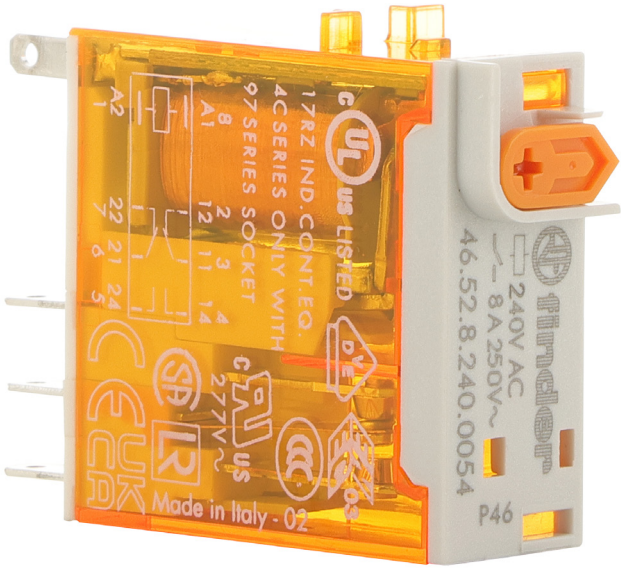


| | |
|---|---|
| **Component type** | Switching relay |
| **Range** | Panel Mount and Power Relay |
| **Model** | N/A |
| **Product status** | Existing |

The Finder General Purpose Panel Mount and Power Relays are a reliable and efficient switching solution for various applications and industries. Options include coil voltages, output current ratings, contact configurations. A modular design allows for surge suppressors, coil indication and timers. Features manual override, push-to-test, slots for markers, jumpers and gold-plated contacts.

| | | |
|---|---|---|
| **ELECTRICAL** | Nominal current | 8 A |
| | Nominal voltage AC | 250 V |
| | Max. rated operation voltage Ue AC | 440 V |
| | Number of contacts as change-over contact | 2 |
| | Drive, switching attitude | Mono stable |
| | Rated switching power at AC-1 | 2000 VA |
| | Rated switching power at AC-15, 230V | 350 VA |
| | Breaking capacity at DC-1, 30V | 6 A |
| | Breaking capacity at DC-1, 110V | 0.5 A |
| | Voltage type for actuating | AC |
| | Control supply voltage Us at AC 50HZ | 240 V |
| | Control supply voltage Us at AC 60HZ | 240 V |
| | With LED indication | Yes |
| | Type of electric connection | Plug-in connection |
| | Electrical life at Un, In (service cycles) | 100000 cycles |
| | Drive, polarization | Polarity free |
| | Type of switch contact | Single contact |
| | Material of contact insert | Thermoplastic |
| | Operating voltage | 192-264 V |
| **CONSTRUCTION** | Material contact | Silver nickel |
| | With mechanical indicator | Yes |
| | With latching test button | Yes |
| | Suitable for plug-in socket mounting | Yes |
| **MECHANICAL** | Mechanical life (service cycles) | 1.0E7 cycles |
| | Max. shock acceleration | 20 g |
| | Max. shock duration | 4 ms |



Published on 17 July 2026

# 46520054240VAC

**Finder 46 Series Miniature Relay 8A 2 CO 240V AC Coil with PB plus LED plus Mech. Indicator**

GENERAL PURPOSE RELAYS

| | | |
|---|---|---|
| **MECHANICAL** | Max. vibration acceleration | 20 m/s² |
| | Max. vibration frequency, operational | 150 Hz |
| **DIMENSIONS** | Width | 12.4 mm |
| | Height | 29 mm |
| | Depth | 32.8 mm |
| **ENVIRONMENT** | Operating temperature | -40…70 °C |

## DIMENSIONAL DIAGRAM

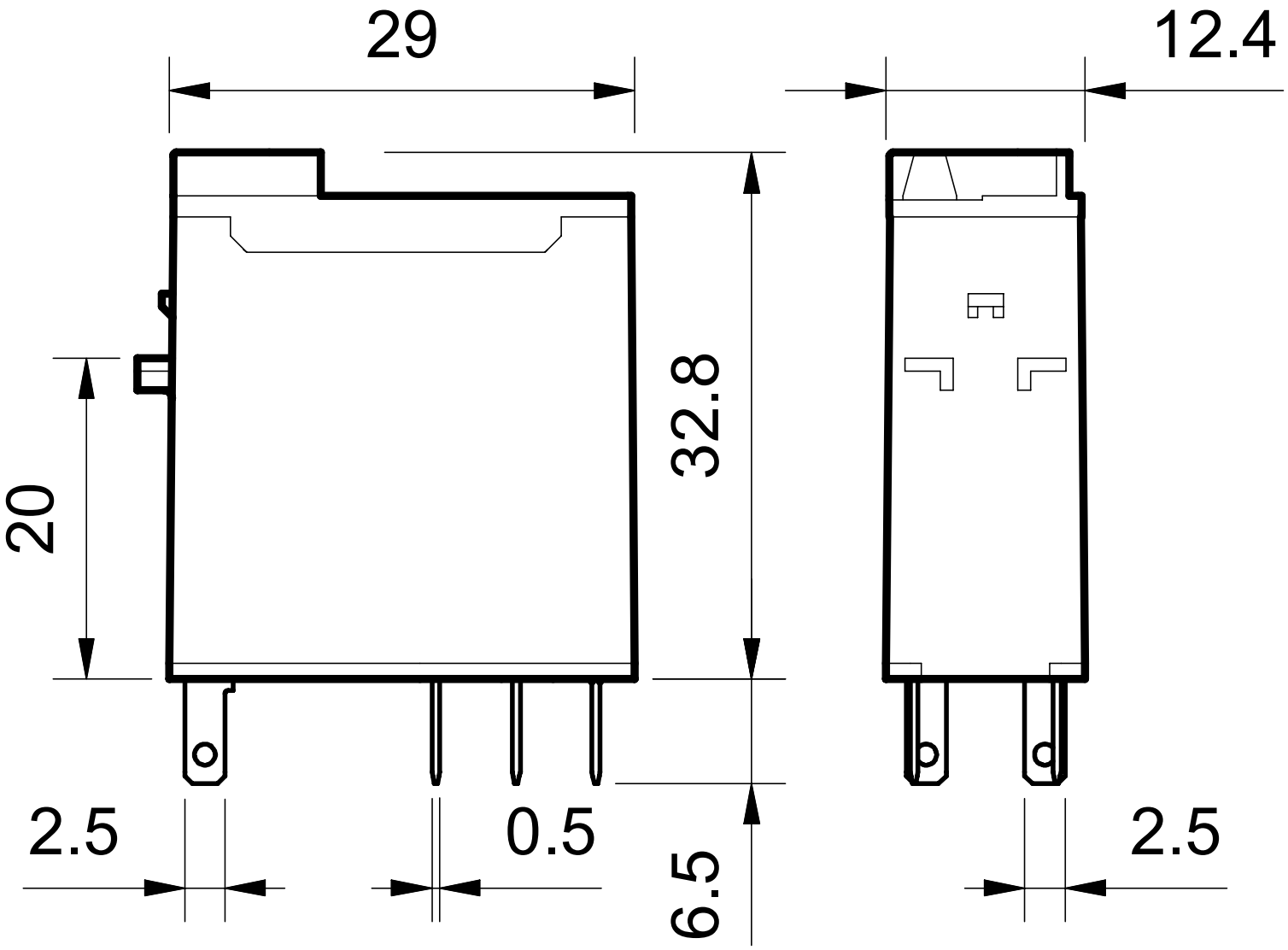




Published on 17 July 2026

## RELATED PRODUCTS

### ACCESSORY

**Item No:** 09700
**Required:** No
**Description:** Finder 97 Series Card Holder for Push In 94/95/97 Series

**Item No:** 09701
**Required:** No
**Description:** Finder 97 Series Retaining Clip for 9701

**Item No:** 09758
**Required:** No
**Description:** Finder 97 Series 8 Way Jumper Link for Push In 94/95/97 Series



**Item No:** 8630240VAC
**Required:** No
**Description:** Finder 86 Series Bifunction Timer Module 240V AC



**Item No:** 863024VACDC
**Required:** No
**Description:** Finder 86 Series Bifunction Timer Module 12 to 24V AC DC



**Item No:** 95004
**Required:** No
**Description:** Finder 90 Series ID Tag 9503 and 9505 Bases



**Item No:** 9518
**Required:** No
**Description:** Finder 90 Series Jumper Link for 9505 and 9701 9702 Base 8 Way

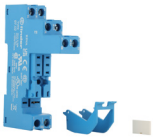

**Item No:** 9702
**Required:** No
**Description:** Finder 90 Series Base for 4652 Relay Box Clamp with Plastic Clip



**Item No:** 99020024
**Required:** No
**Description:** Finder 99 Series Green LED Module 6 to 24V AC DC



**Item No:** 9902002409
**Required:** No
**Description:** Finder 99 Series RC Module for Relay 6 to 24V AC DC



**Item No:** 9902002498
**Required:** No
**Description:** Finder 99 Series Green LED plus Varistor Module 6 24V AC DC



**Item No:** 99023000
**Required:** No
**Description:** Finder 99 Series Diode Module Standard Polarity 6 to 220V DC



**Item No:** 99029024
**Required:** No
**Description:** Finder 99 Series Green LED plus Diode Module Standard Polarity 6 to 24V DC